THE MAGAZINE FOR INDUSTRIAL VEHICLE TECHNOLOGY, DESIGN & ENGINEERING

iVT

INTERNATIONAL
INDUSTRIAL VEHICLE TECHNOLOGY

June 2013

20th ANNIVERSARY YEAR

New vehicles:
Fendt Katana 65 forage harvester
Claas Axion 900 tractors



Interview:
Five big Cats

Design Challenge:
Suspension

Why aren't we using:
Air cushion technology?

Shock treatment

How the latest suspension technologies will keep your feet firmly on the ground and your head out of the clouds

www.iVTinternational.com

Driving Innovation

With Durable Battery Cooling

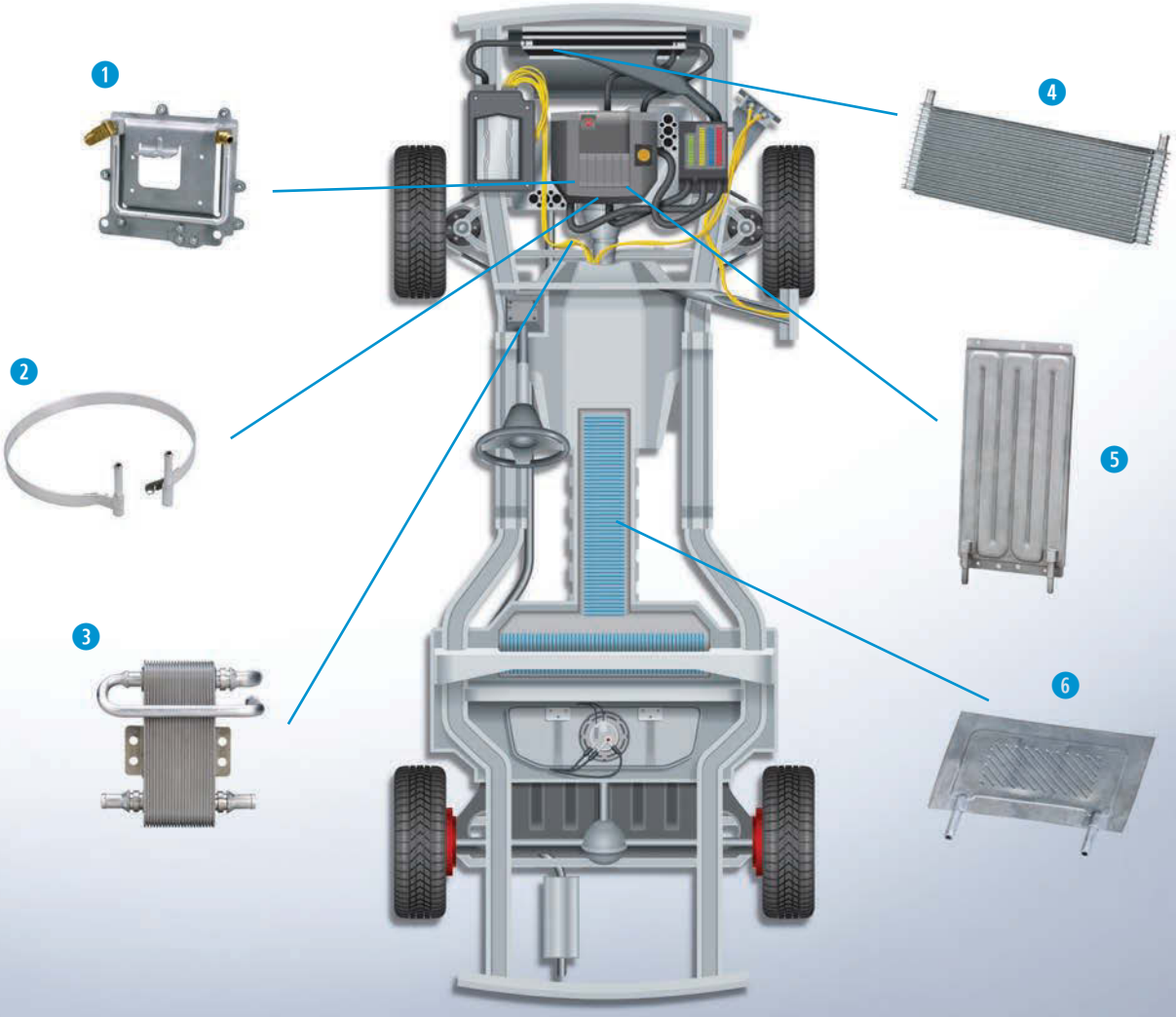

1. **Engine Control Unit Cooler**
2. **Universal Stator Cooler**
3. **Hybrid and Electric Vehicle Battery Cooling Chiller**
4. **Sub-Cooled Loop Radiator**
5. **Electronic Cooling Plate**
6. **Interelement Cooling Plate**

CUSTOMIZED BATTERY COOLING TECHNOLOGY As a leader in thermal technologies, Dana works with global automakers to create custom hybrid cooling solutions for the unique and changing needs of today's advanced battery systems. Our hybrid cooling technology is manufactured with various types of lightweight aluminum and provides a multitude of benefits to the vehicle. The cooling technology is easily recyclable, which contributes to the overall environmental benefits of electric and hybrid-electric vehicles. For more information, call **1-888-670-DANA** or visit **http://auto.dana.com/b19.**

DANA

LONG®
Thermal Products

© 2011 Dana Limited

CONTENTS



COVER STORY **p44**

THINGS THAT GO BUMP IN THE SITE

With the latest suspension technologies transforming comfort levels and productivity on the job site, operators can now sleep soundly at night



p38



p54

REGULARS

6 **NEWS**

9 **CONSTRUCTION FOCUS BY JIM MANFREDI**

11 **AGRICULTURE FOCUS BY JIM MANFREDI**

12 **MATERIALS HANDLING FOCUS BY MICHAEL LEU**

14 **TALKING HEADS JOHN MAGUIRE, FLEXI NARROW AISLE**

82 **BULLETIN BOARD POWERTRAIN FOCUS**

88 **THE INSIDER**
What's the true cost of an off-highway sweatshop?

"There is a developing market for air-cushion vehicle applications in agriculture. Air cushion technology could be applied to ... smaller sprayers and cultivation equipment" **p54**



CASE STUDIES & SPECIAL FEATURES

16 **20 YEARS OF *iVT***
Some interview highlights from the archives

18 **BEST OF BAUMA**
Bauma not only welcomed over half a million visitors, but also showcased many not-to-missed developments. Here are a few highlights – in case you *did* miss them…

22 **TAKE FIVE...**
… of Caterpillar's senior management, sit them in front of a few technology editors and what do you get?

28 **DESIGN CHALLENGE**
Design a suspension system that will improve the stability of a construction or agricultural vehicle on soft or uneven terrain

38 **CREAM OF THE CROP**
With an emphasis on overall efficiency through the selection of the best possible components, the Claas Axion 900 is challenging the established pecking order in the tractor market

54 **DAMAGE LIMITATION**
Air cushion technology is ideal for applications where reduced ground pressure is a must – so why isn't the off-highway industry using it?



Vol. 21 No 2
Cover image: JCB

SUBSCRIPTION / CHANGE OF ADDRESS ENQUIRIES TO:
Subscriptions Manager Suzie Matthews
suzie.matthews@ukipme.com
Circulation Adam Frost *adam.frost@ukipme.com*
Database Manager James Taylor
james.taylor@ukipme.com

Editor Richard Carr
richard.carr@ukipme.com

Production Editor Alex Bradley
Chief Sub Editor Andrew Pickering
Deputy Chief Sub Editor Nick Shepherd
Proofreaders Frank Millard, Kari Wilkin, Lynn Wright

Art Director Craig Marshall
Design Louise Adams, Andy Bass, Anna Davie, James Sutcliffe, Nicola Turner, Julie Welby, Ben White

Head of Production & Logistics Ian Donovan
Deputy Production Manager Lewis Hopkins
Production Team Carole Doran, Cassie Inns, Robyn Skalsky

International Advertising Co-ordinators
Kevin Barrett (*kevin.barrett@ukipme.com*)
Michael Briant (*michael.briant@ukipme.com*)

Editorial Director Anthony James
Managing Director Graham Johnson
Chairman & CEO Tony Robinson

The views expressed in the articles and technical papers are those of the authors and are not endorsed by the publishers. While every care has been taken during production, the publisher does not accept any liability for errors that may have occurred.

iVT International USPS 018-627 is published quarterly, in February, July, September and November, by UKIP Media & Events Ltd, Abinger House, Church Street, Dorking, Surrey, RH4 1DF, UK.
Annual subscription price is US$102. Airfreight and mailing in the USA by agent named Air Business Ltd, c/o Worldnet Shipping USA Inc, 155-11 146th Street, Jamaica, New York 11434. Periodicals postage paid at Jamaica, New York 11431. US Postmaster: send address changes to *iVT International* c/o Air Business Ltd, c/o Worldnet Shipping USA Inc, 155-11 146th Street, Jamaica, New York, 11434.
Subscription records are held at UKIP Media & Events Ltd, Abinger House, Church St, Dorking, Surrey, RH4 1DF, UK.
Air Business is acting as our mailing agent.
iVT International, ISSN 1471-115X, is protected by copyright ©2013.

Average net circulation per issue for the period 1 January-31 December 2012 was 10,391.

Published by
UKiP MEDIA & EVENTS

UKIP Media & Events Ltd,
Abinger House, Church Street,
Dorking, Surrey RH4 1DF, UK
Tel: +44 1306 743744
Fax: +44 1306 742525
Ed. fax: +44 1306 887546

Printed by William Gibbons, Willenhall, West Midlands, WV13 3XT, UK

abc Member of the Audit Bureau of Circulations

CONTENTS

PRODUCTS & SERVICES

62 BREAK THE HABIT
Webasto's custom-built HVAC systems will provide a fuel-saving solution to excess idling

64 GREEN AND PLEASANT
FPT's HI-eSCR technology promises clean operation with reduced fuel burn and operating costs

65 CAN THE CAN
With the PowerTech PWL 4.5L, **JDPS** has expanded its Tier 4 Final offering while ditching the DPF canister

66 HOT AND BOTHERED
Thermamax designs high-performance insulation solutions for protection against fire and accidental contact

67 HEADING FOR TROUBLE
Durable connections such as those from **TE Connectivity** can cope with the harsh conditions of the cylinder head

68 BUILT LIKE A TANK
One resilient Gelbring refuelling hose from **ContiTech** was still going strong after 33 years of harsh outdoor use

70 THE FUTURE IS ELECTRIC
Electric drives are expanding their reach, says Leif Svensson, VP of sales Western Europe at **Curtis Instruments**

72 ON THE RIGHT TRACK
With its railway-spec controllers and interfaces, **ifm** ensured safe operation for a rail-reach access platform

73 *DO* TOUCH THAT DIAL!
You won't be able to keep your hands off **Motometer**'s flexible CANbus-enabled multifunctional display

74 INSIDE JOB
MTS's precise in-cylinder measurement technology can improve productivity and reduce the cost of installation

77 THE MATING GAME
As well as speeding up installation, the EO-3 coupling system from **Parker Tube Fittings** will form lifelong bonds

78 BEST OF THREE
Reliability, sustainability and performance are all vital for hydraulic hoses, says **Parker Fluid Connectors**

79 BREAKING NEWS
Stucchi's hydraulic quick connectors are spot on for demolition excavators, ensuring everything is broken except the machine itself

81 OUT WITH THE OLD...
...and in with the new. Switching your hydraulic fluid to **Evonik**'s Dynavis can lead to vastly improved performance and economy


p66



p72

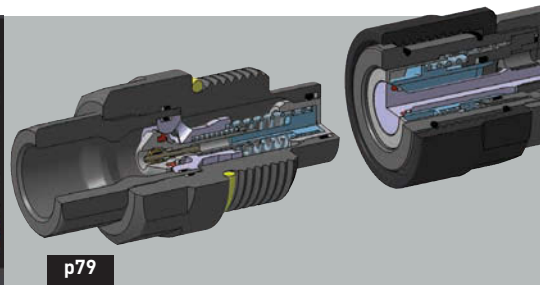
p79

FOREWORD

It didn't really register too much at the time, but now I come to think about it, there seemed to be an unusually high number of exhibitors highlighting their corporate responsibility at Bauma this year. For example, many of their press conferences contained at least a nod to the well-being of their employees – and as Caterpillar's Ed Rapp says in our feature beginning on page 22, it's all about being "a good local citizen".

At the time, I wondered if all this was a reaction to the recent spate of headlines revealing the outrageous behaviour of some of the world's richest companies in dodging corporation tax through dubious – and, some have even suggested, potentially illegal – tactics. It's often said that there's no such thing as bad publicity, but it can't be denied that the CEOs of most of those outfits are doggedly weathering the storm in the face of public opinion at the moment, hoping it will all blow over soon.

Sadly, I don't suppose my boycotting Amazon for the local Oxfam book shop, switching from npower to a more 'ethical' electricity provider, surfing the web via Bing instead of Google, or emailing Starbucks to declare I'll be refraining from patronising its establishments (not that I ever did anyway) will even register on their radars. For many customers, it seems, hitting these companies where it hurts by giving up a few simple pleasures or some relatively small financial savings is a step too far.

But then the consequences of our obsession with a bargain was all too vividly brought home a week after Bauma, with the Dhaka factory collapse claiming more than 1,100 lives. It's quite difficult to say with whom the blame really lies – is it the owner of the building, the contractors who built it, or is it us, the consumers who are only too willing to be blissfully ignorant of the conditions in which our cut-price clothing is produced?

So, without wishing to steal The Insider's thunder (p88), the off-highway market may not be immune to the fallout this tragedy might bring. As the search for the next low-cost country goes on, what are the consequences for those employees assembling subcomponents or machines? And, as a sidenote, what about the quality? At the recent UK launch of the Katana 65 (p6), one of the speakers reiterated Fendt spokesman Peter Paffen's candid assertion that its Chinese facility probably could not make components to the required high standards.

In the era of globalisation – and some of off-highway's biggest players epitomise the definition of 'corporate giant' – there's a lot to lose if your name is tarnished...

Richard Carr, editor, iVT International

Coming up in the September issue of iVT

- 20th Anniversary spectacular – Top 20 vehicles from the archives • Cabs of the future
- Exclusive interviews, including Martin Richenhagen, AGCO CEO • Agritechnica Preview
- Look out for the *Advanced Lift-truck Technology Annual* in July!



We Turn Strong Machines into Clean Power Packs



To satisfy the stringent guidelines for protection of the environment and climate, we have improved our clean solutions for construction and agricultural equipment: The air conditioning lines reduce CFC emissions by as much as 95% thanks to innovative technology – an extremely thin film barrier layer. And the SCR lines, equipped with heated quick connectors that ensure optimized contact, meet the latest emission limits specified for modern engines. Our hoses, hose lines and connection elements contribute substantially to the construction of future-proof and eco-friendly vehicles and machines in many industries.

ContiTech Fluid Technology – the connecting force.

www.contitech.de

Fluid Technology
mail@fluid.contitech.de

ContiTech. Engineering Green Value

Continental
CONTITECH

Best in Class AC controller technology...

e series

The safest.

Dual-micro architecture meets or exceeds the latest international functional safety requirements.

With unmatched performance.

Outlasts and outperforms with more features, improved ratings and simple motor auto-characterization routine. Powerful, enhanced 64 MHz main-microprocessor and extended FLASH memory.

With vast flexibility.

Super programmability with minimum effort. Configurable CAN master capability with proprietary Vehicle Control Language (VCL).



The most reliable.

Decades of Curtis controller experience by a global technology leader with millions sold back every unit.

That's all true!

But, those are many words. Let's just say it simply:

Curtis = Confidence

The Curtis Difference

You feel it when you drive it

Plus – Someone to help you use it!



Meet Kerry Green, your partner in industrial vehicle system integration.

Even the most experienced EV OEMs can be challenged by today's highly specialized, advanced controller technology. At Curtis, we understand that – and we have a solution. We provide an expert partner to assist you from beginning to end, at every stage of the process.

Kerry, of Curtis UK, is just one of our many experienced and enthusiastic customer support engineers around the world. Each member of this highly skilled team stands ready to support major OEMs in leading-edge product development. Our global network makes Curtis an extension of your own engineering department.

We will partner with you to specify, design and build a complete electric vehicle control system, so you can build the best possible EV.

We are ready to help you.

CURTIS

www.curtisinstruments.com

With its Japanese name carrying the meaning 'efficient cutting by high-precision instrument', Fendt is making bold claims about the performance of the Katana 65



Splendour in the grass

HOHENMÖLSEN, GERMANY – Series production may have begun back in 2011, but the Fendt Katana 65 has only just been launched into its third market, the UK and Eire. As the third-largest European market for self-propelled forage harvesters after Germany and France (barring the volatile Russian market), the region – in which Fendt tractor registrations have doubled despite a shrinking market – offers great promise. "At 653hp, the Katana is aimed at the fastest-growing sector [551-750hp] of the market – and we are also receiving serious enquiries for demonstrations from customers who are new to us as well," says Richard Shelton, sales manager for the UK and Eire.

Boasting the largest cutting cylinder in the industry, and claiming unique features in almost every area, the forage harvester is powered by a 15.93-litre Tier 4i MTU OM 502 LA V8 engine equipped with SCR. Specifically tuned to deliver torque and peak power according to harvesting demands, its maximum power of 653bhp and maximum torque of 3,000Nm are developed at low rated speeds of 1,800rpm and 1,300rpm respectively, reducing fuel consumption.

Drive from the main shaft goes straight into a speed-shift gearbox that provides the EcoPower facility, enabling the 1,600rpm cutting speeds that save fuel when working in second- and third-cut grass crops. A single multi-V belt then transfers power to the main knife cylinder, through a clutch, via the cooling system pulley and blower and Auto-tensioner unit.

Access to the engine and hydraulic system is simplified with large side doors, which open on parallelogram linkages to provide several benefits, including enabling maintenance to be carried out inside narrow barns, and providing a secure safety barrier when walking on the top of the machine.



The chopping channel

With efficient forage harvesting being reliant on an even feed in a straight line, there are no unnecessary directional changes to the crop flow in the Katana 65 – crop is fed straight from the pick-up or maize header into the feed rollers. With constant and effective acceleration, and a metal detector fitted to the outermost roller for maximum distance from the drum, no bottlenecks are created – even on undulating surfaces and slopes where optimum crop flow is maintained by ensuring the feed rollers always remain parallel while the header mounting point is free to oscillate.

The six hydraulically driven feed rollers progressively compress the crop and feed it straight into the knife cylinder. At 800mm wide and 720mm diameter, this is claimed to be the largest in the industry, and is equipped with 28 blades arranged in a V configuration. Rotating at 1,150rpm, this provides up to 16,100 cuts per minute, with stepless chopping lengths from 4-10mm or 10-21mm being selectable from inside the cab. Removing half of the knives doubles the chop lengths – again in those two ranges – up to 42mm.

At 770mm wide and 550mm in diameter, the crop accelerator roller is fitted with V-shaped paddles to quickly propel large quantities of material up the chute.



The machine also boasts an innovative patented corn cracker, using 265mm-diameter V-shaped disc rollers, rather than the more conventional smooth models. This provides approximately double the friction surface area, ensuring kernels are crushed more efficiently for better feed utilisation. With the speed of both rotors being constant, unlike the traditional versions which can vary by 60%, the system consumes less power.

When it is not required, the corn cracker can be electrohydraulically swivelled out of the way, making it easy to switch back to grass when required.

ON THE WEB

Five Katana animations at:
www.iVTinternational.com



LEFT: **Service access doors double as a safety rail for when working on top of the machine**

BELOW: **A wide field of view from the Visio5 cab**

The longitudinal engine arrangement also enables greater servicing access, providing room for a spacious maintenance platform between the cooling unit and harvesting elements. This engine layout also provides the ability for a lower mounting point, which improves stability as well as enhancing visibility over the bonnet to the rear.

Suspended comfort

Provided by the Spicer Model 733/146 suspended axle, rear axle suspension comes as standard and, working in a similar way to the active system on Fendt tractors, provides increased traction and a more stable weight distribution. On-highway travel speeds of 40km/h can now be achieved in comfort, as well as high cutting speeds.

Drive is provided to the rear wheels via shafts connected to a central, hydraulically driven gearbox. And with the front wheels powered by individual Rexroth hydrostatic wheel motors, permanent all-wheel drive is achieved, although this automatically switches off at on-highway speeds above 20km/h to reduce fuel consumption.

Traction is maintained by an automatic diff lock and the 'Intelligent ASC' anti-slip control, which automatically senses when a wheel is slipping and diverts drive to the other three.

The purpose-built Visio5 cab provides high levels of visibility, especially in conjunction with the cameras facing the rear and on the spout. Either can be viewed separately or together on the in-cab screen, with their images wirelessly synched with the screen in the haulage tractor.

Virtually every function is operated by the Variotronic terminal, via 'buttons' on its 10.4in touchscreen. However, main forager functions are controlled by the multifunction joystick, with potential for programming other frequently used functions.



A TOGNUM GROUP BRAND



So major projects don't bite the dust:

Off-Highway engines by MTU. Tougher – whatever the conditions.

All around the world, off-highway operations face extreme conditions every day. It's a good thing they can depend on MTU drive systems in any situation. The MTU Series 1000–1600 engine lineup offers unmatched performance, all while meeting EU Stage IV/EPA Tier 4 final requirements and achieving significantly low fuel consumption. Trust the best for the toughest jobs in the world – anytime, anywhere.

www.tougher-whatever-the-conditions.com



Series 1300

Power. Passion. Partnership.



SHAKE, RATTLE AND ROLL

TIRSCHENREUTH, GERMANY – Hamm has launched two VC (vibration crusher) rollers with an innovative compaction solution – a versatile crusher drum that enables use across a wide application spectrum.

The single-drum 160kW H25i VC and 155kW 3625 HT VC rollers feature a vibrating, tool-equipped drum to crush and loosen rock and concrete. Or, by using the specially developed quick-change toolholder system, they can be used as padfoot rollers. This enables several transport and handling steps to be dispensed with, saving time and fuel. When hard-rock crushing with simultaneous compaction, for instance, the number of excavators and crushers can be greatly reduced.

For crushing or loosening rock, the 150 toolholders are fitted with specially developed and reusable solid carbide picks. And with a variety of differently shaped picks that have been designed for rock with different compressive strengths, VC models are able to break up rock layers consisting of basalt, granite or minerals, as well as mixed soils, while compacting it to a great depth.

Roadbuilding applications include the homogenisation of rock or breaking up of concrete as well as compaction during cold recycling. There are also numerous applications in the preparation of routes in rocky terrain, as well as the pre-crushing or loosening of rock for recycling *in situ*.

After compacting highly abrasive fine-grain minerals, padfoot elements can simply be replaced as a wear part rather than having to replace the entire drum. A special transport device has also been developed that enables the vehicle to manoeuvre and travel across any surface without damage to the tools or the surface (inset picture).



SPREAD THE LOAD

MEPPEN, GERMANY – With the launch of the 10-tonne capacity 4010, Bergmann has added a tracked dumper to its line-up – with additional models being promised in coming years.

On 750mm tracks, and with its 6.3m^3 capacity tray fully loaded, the 20-tonne machine produces a ground pressure of just 0.45kg/cm^2, or 0.25kg/cm^2 when empty, reliably meeting requirements for use in marshy areas. With a modularly designed frame, the 4010 can also be customised to meet diverse requirements. Different dump bodies, such as a rear tipping trough, round tipping trough, loading platform or skip can be mounted, using a quick-change system if required.

The track frames have been designed for optimal transfer of power as well as enhanced weight distribution, and incorporate a planetary gearbox with a hydraulic parking brake and two-stage hydraulic motor. With power coming from a 180kW Tier 4i six-cylinder Cummins engine, continuous driving at speeds up to 14km/h is enabled, with enough in reserve to tackle 100% grades when fully loaded. Inboard wet disc brakes enhance safety.

A 33cm^3 gear pump for auxiliary equipment is standard, with an optional 115cm^3 axial piston pump making the 4010 ideal for operating winches, cranes and other attachments.

With ergonomics in mind, access is via an automatically retractable step. There is also a choice of a steering wheel or joystick-controlled steering.

CONSTRUCTION FOCUS

JIM MANFREDI, MACHINERY OUTLOOK

A RECORD YEAR

2012 was a big success for the Liebherr Group, which increased turnover by more than 9% to €9.1bn. For its construction machinery and mining equipment products, revenue increased by almost 9%, to €5,870m, about two-thirds of total turnover.

Turnover from the mining division rose by almost 28% to €1,290m. Growth in the mobile cranes division also grew at an above-average rate, by 12% to €1,940m. In the earthmoving, tower cranes and concrete technology divisions, revenue remained flat. The maritime cranes division recorded growth of 3% to about €830m.

Turnover went up in all regions, with notably high rates of growth in eastern Europe and Africa. It rose slightly again in western Europe, reaching €3,970m, or +4%. In eastern Europe it increased by 16%, to more than €1,050m. At €1,500m, North American turnover rose by 11%. African sales were 26% higher than in the previous year, at €590m, while the APAC area enjoyed a consecutive 12% increase in turnover, hitting €1,670m.

The Group expects total 2013 turnover to reach the same level as in 2012, with relatively moderate growth expected in the construction machinery and mining areas in particular.

PAVING THE WAY

Terex Corporation is selling its asphalt-paving machinery lines to Fayat Group. Product lines being divested include asphalt plants and pavers manufactured in Porto Allegre, Brazil, and assets for the reclaimer stabiliser, asphalt paver and material transfer product lines that are currently manufactured in Oklahoma City, OK, USA.

The asphalt machinery business accounts for about 10% of annual revenue for Terex's construction-equipment unit.

Terex will continue to assemble mobile concrete-mixing plants and concrete-paving machinery in Oklahoma City, but it is also attempting to find a buyer for its concrete-paving lines.

AS YOU WERE

Figures from the VDMA indicate the European construction equipment and building material machinery market is unlikely to make significant improvements in 2013. Sales in Germany have decreased by about 1% YoY, which the association takes as a sign of stagnation in the market. 2013 will not see any peaks, with demand unlikely to grow until the second half of the year.

VDMA expects China's financing problems and surplus capacity to be resolved in the next year or so, meaning it will remain the primary market. New business will likely come from less traditional markets, such as Indonesia, Myanmar, southern Africa and Mongolia.

VISIBILITY IS KEY

Sandvik Mining has selected Volvo Penta engines for its underground mining trucks and loaders. Having adopted the model TAD1251VE diesel in its TH430 underground trucks three years ago, the OEM has now decided to power all of its large loaders and trucks with Volvo Penta Tier 4i engines equipped with SCR and no DPF.

One critical consideration for Sandvik's engineers was to ensure optimum visibility for machine operators. The Tier 4i engines do not use EGR, meaning the radiator size is similar to those seen in Tier 2 equipment.

Subscribe online at **www.machineryoutlook.com**



John Deere engines are built to meet a higher standard — yours

JOHN DEERE

You expect reliable performance from your engines — and nothing less. That's why John Deere always puts engine performance first. PowerTech™ Final Tier 4/Stage IV engines, with our optimized Integrated Emissions Control system, let you focus on your work and get the job done. Push through the tough spots without losing speed. Respond immediately when you need more power. And do it all while maximizing fuel and fluid economy.

John Deere PowerTech engines. The right technology. Right now.

John Deere Power Systems
Tel: +33 2 38 82 61 19
Fax: +33 2 38 84 62 66
Email: jdengine@johndeere.com
Johndeere.com

JohnDeere.com



SUSPENDED SENTENCES

JACKSON, MN, USA – Two new high-clearance RoGator sprayers are delivering benefits in terms of fuel consumption, maintenance and ergonomics.

Powered by an 8.4-litre AGCO Power engine tuned to a peak horsepower of 338 or 370bhp respectively, both the RG1100 and RG1300 also feature a new, longitudinal 'A' suspension that creates sharper turns, minimises soil disturbance and reduces in-cab motion.

"Air suspension, in combination with the Flex Frame, work together to deliver superb levels of suspension, reliability and durability," said Jim Ubaghs, product support specialist, spraying equipment – EAME.

"The bolted C-channel flex frame gives constant contact of wheels with the ground, even with a difference of 40in between two wheels, to ensure maximum traction and increased stability. Next to this, the air suspension consists of an air spring and a shock absorber to provide the best boom stability and most comfortable ride."

The front axle has been repositioned for improved weight distribution, as well as better visibility of the front tyre from the operator station. Optional GatorTrak four-wheel steering shrinks the turning radius from 7m to 4.8m.

Fuel tank capacity has been increased to 570 litres, and there are filling points on either side of the machine. Almost all service points are now accessible from ground level, with the new grease banks at the rear keeping the high grease points well lubricated. Covers on the undercarriage and hydraulic hoses reduce downtime from wear and tear due to contact with crops.

BEST OF THREE



BASILDON, UK – Three Auto Command CVT models have been added to New Holland's T6 tractor range. Producing up to 163hp and 676Nm with Engine Power Management), the four-cylinder T6.140, T6.150 and T6.160 complement the OEM's Electro Command semi-powershift and Dual Command mechanical transmission options.

As a refinement of the T7 CVT, the T6 uses an identical forced-based operating logic, with key controls sited on the CommandGrip multifunction handle. This enables drivers to select and fine-tune three target speeds and activate the cruise mode. Ground speed can be adjusted in 0.01km/h graduations, down to 20m/h at rated engine speed, or up to a 50km/h transport speed.

The CVT has been designed for maximum efficiency at the most frequently used operating speeds for cultivation and high-speed transport, maximising the use of mechanical drive. A 50km/h Eco version enables top speed to be reached at lower (1,750) rpm.

The Active Start Stop feature holds the tractor in a stationary position when at standstill, improving safety while hauling laden trailers on hilly terrain.

The upgraded Horizon cab provides a luxurious operator environment – search for 'Horizon' on the iVT website for more details.

AGRICULTURAL FOCUS

JIM MANFREDI, MACHINERY OUTLOOK

11 IN A ROW

An 11th consecutive quarter of record earnings meant Deere & Company revenues rose 10%, with equipment sales reaching €5.16bn. Sales in the Agriculture & Turf division rose 16%, with €582.16m operating profit.

Worldwide agriculture and turf equipment sales are forecast to increase by 6% for 2013. Relatively high commodity prices and strong farm incomes are expected to continue supporting demand.

Industry sales in North America are forecast to be flat to up 5% over 2012, with caution in the US livestock sector expected to partly offset continued strength in demand for high-hp tractors and combines.

Full-year industry sales in the EU27 are forecast to be down about 5%. In South America, industry sales are projected to be up 10-15% as a result of strong market conditions in Brazil. Industry sales in the CIS are likely to be down slightly, but a little higher in Asia due to some strengthening in the Chinese economy.

Deere expects its North American sales to increase by more than the industry rate due to the impact of new products.

MIXED FORTUNES

Manitou's 2012 revenues reached US$1,619.2m, an increase of 12% compared with 2011. Management stated that its business remains very volatile and calls for greater agility, mainly for rentals.

The Rough Terrain Handling division generated Q4 revenues of US$251.8m, down 8% YoY. Although the construction sector has been weak in southern Europe but stable in northern Europe, agriculture remains sustained, while new business activities showed solid growth, and the OEM's position in emerging markets is firming up.

The Compact Equipment division generated Q4 growth of US$86.3m, up 29% YoY, with North America fuelling that growth, in both the rental and agriculture segments.

The Industrial Material Handling division posted Q4 revenues of US$54m, down 3% YoY – a shortfall that is primarily attributable to the Toyota mast subcontracting business.

RAISING STANDARDS

The French Agricultural Equipment Manufacturers Union (AXEMA) has become a new member of the AEF (Agricultural Industry Electronics Foundation) and will join it in promoting the manufacturer-independent dissemination and implementation of ISObus standards in France.

As the fourth association of manufacturers to have joined the AEF, AXEMA represents over 230 OEMs of agricultural machines and tractors in France – or about 90% of the sector.

"With the help of the AEF, AXEMA will assist its member companies in implementing ISObus by advocating the establishment of a French test institute that would carry out ISObus development tests and the AEF Conformance Test, subject to demand," said Jean-François Goupillon, technical manager of AXEMA.

The Agricultural Industry Electronics Foundation was initially founded by seven international agricultural technology companies and two associations, and now boasts about 140 members. It aims to establish ISObus, and agricultural electronics in general, worldwide.

Subscribe online at **www.machineryoutlook.com**

HANDLING FOCUS

MICHAEL LEU, FORKLIFTACTION.COM

JOINT EFFORT

Konecranes and Kion Group have finalised collaboration for their container handling forklift business announced this February. Konecranes will become the long-term supplier of heavy forklifts to the worldwide distribution network of Linde Material Handling, which is wholly owned by Kion Group. Both companies will continue to offer a full range of heavy forklifts, including reach stackers, empty container handlers and laden container handlers.

Konecranes has also acquired several assets, including the product rights for container handling trucks. Linde Material Handling will initially continue to produce container handling forklifts, while Konecranes will use the product rights to further enhance its product range. The acquired assets will be consolidated into its financial reporting in the second quarter of 2013.

With production being transferred to VOP's contract manufacturing facility in the Czech Rep. from September, with full production slated for October, Linde's heavy truck factory in Merthyr Tydfil, UK, will close by the end of October.

VOP is already a major supplier to Linde Material Handling and, according to Kion spokesman Frank Brandmaier, the Czech firm's expertise in producing bespoke, specialist vehicles makes it an ideal partner.

NARROW MARGINS

Toyota Material Handling Europe is to buy the VNA forklift business of Dambach Lagersysteme. Dambach has been a supplier of three VNA truck models to TMHE for over 10 years. Under the agreement, production of the BT brand of VNA trucks will be moved from Bischweier, Germany, to the TMHE factory in Mjölby, Sweden.

"Dambach has made the strategic decision to focus on its core stacker crane business, and TMHE will integrate the Dambach range into the existing VNA range built in our factory in Mjölby," revealed Hans Van Leeuwen, TMHE executive VP of marketing and sales.

SUCCESS STORY

Power Solutions International (PSI) says its Tier 4 diesel engine replacement work with Hyundai Heavy Industries is a success. PSI supplies HHI with 4.3-litre liquid propane engines for its 7A series 60/70L LPG forklifts.

The PSI 4.3-litre engine delivers 118bhp at 2,600 rpm when running on LP fuel. PSI claims the engine offers end-users greater acceleration and gradability, and fast travel speeds on tough terrains and slopes.

Jeremy Lessaris, PSI's director of marketing, says the FLT market has been one of the company's fastest-growing segments in recent years, with sales nearly tripling in the last two years.

SHIKI FOR PRESIDENT

Akira Shiki has succeeded Peter Kruse as president of UniCarriers Americas Corp, after Kruse resigned in April. Kruse became president of predecessor Nissan Forklift Corp North America in 2009 after five years as CFO.

Kruse joined Nissan in 2004 as CFO and, over five years, eliminated its debt and achieved the highest divisional profit. Shiki was recently officer and general manager of merchandising for parent UniCarriers Corp of Tokyo. He was VP of product engineering for Nissan Forklift NA from 1994-2004.

Global materials handling online: www.forkliftaction.com

SKY BLUE THINKING

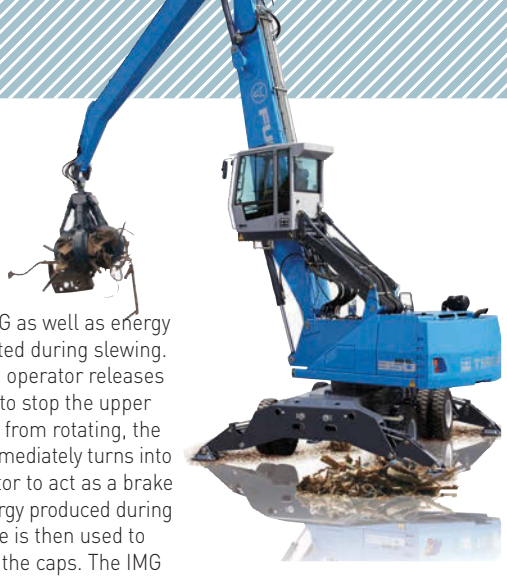

BAD SCHÖNBORN, GERMANY – Premiered at Bauma, a Blue Evolution hybrid version of the Terex Fuchs MHL350 E material handler was boasting up to 30% better fuel efficiency than the conventional 33- to 37.8-tonne model.

It is built around a 160bkW Deutz engine that incorporates an IMG (integrated motor generator) rather than the traditional flywheel to produce electricity when the engine is running. Having replaced the traditional hydraulic slewing arrangement, an electric motor provides a slew speed of 7rpm and a higher slew torque than the standard version, enabling faster simultaneous movement of the dipper/boom and upper structure.

The slew motor is powered via capacitors that are charged by the IMG as well as energy recuperated during slewing. When the operator releases the lever to stop the upper structure from rotating, the motor immediately turns into a generator to act as a brake – the energy produced during this phase is then used to recharge the caps. The IMG can also act as a motor when the handler is at full capacity, adding a further 30kW of power for up to 30 seconds.

Further fuel savings can be achieved with the fitting of an Auto Shutdown function to prevent excessive idling. The IMG will then instantly restart the engine when required, much faster than is possible with a traditional starter motor.

Both hybrid and standard versions of the material handler feature an improved hydraulic system with a 330 l/min flow rate for increased boom and dipper speeds. Without the need to drive the slew motor, this results in quicker compound slewing and boom operations on the hybrid model.

Both models also feature a new separated and more powerful cooling system to enable operation in higher ambient temperatures or in applications that generate high amounts of debris.

MAKING A CLEAN SWEEP



ASCHAFFENBURG, GERMANY – Linde Material Handling, in association with Val'Air, a French specialist in sweeper technology, has presented a compact hybrid sweeper based on a municipal vehicle chassis produced by Brandt Motors.

Designed for cleaning city centres and company premises, the vehicle is powered by Linde's eco-Kit M, consisting of an asynchronous motor with maximum output of 32kW, a power module and a control unit. This provides a maximum speed of 30km/h, which is reduced to 10km/h during sweeping operations.

A donkey IC engine drives the brushes and the conveyor belt that transports dirt into the hopper, although this is expected to be replaced by an additional eco-Kit M as a further development step.

"eco-Kits from ES&D [Linde Electronic Systems & Drives] are ideally suited for the straightforward electrification of special vehicles for city centres," stated Jacques Daval, MD of Val'Air.

"The individual components are optimally matched to each other, they have proved their worth in industrial trucks and they are cost-effective too. Therefore it was easy for us to select this drive solution for our sweeper and we will take the next step towards full electrification together with Linde too."

Just three months elapsed between the supply of the components and the commissioning of the vehicle. The systems solution worked smoothly from the first test and was adjusted to the specific individual vehicle features using the control software developed by Linde.

Temposonics®

Absolute, Non-Contact Position Sensors



Indestructible

Temposonics® MH-Series sensors are developed for direct position measurement inside the hydraulic cylinder. Guaranteed reliable and durable for decades in the rough environment of mobile off-highway machinery. With IP69K-connector for easy mounting.

MTS® SENSORS

MTS Sensor Technologie GmbH & Co. KG • Tel. +49 (0) 23 51 / 95 87-0 • www.mtssensor.com

The Measurable Difference

MAN UP? NOT LIKELY!



JOHN MAGUIRE, SALES AND MARKETING DIRECTOR OF FLEXI NARROW AISLE, CLAIMS TURRET TRUCKS ARE OLD HAT

"Advances in high-definition camera systems mean that demand for man-up turret trucks is likely to plummet so dramatically that the technology could become obsolete within the next five years. These were developed in the late 1970s to do one thing – stack pallet loads at high lift heights in very narrow aisles while lifting the operator to the level within the racking from where the pallet is to be picked or put away. This was considered essential when lifting at heights of over 9m as it gave the operator a clear view of the pallet handling process. The poor quality, reliability and high cost of black and white cathode ray tube CCTV screens and cameras meant that stacking remotely was not a practical solution without introducing levels of remote automation that were not cost-effective.

However, as high-definition CCTV camera systems, RFID and data scanning systems have evolved, the man-up turret truck looks increasingly like yesterday's technology. When forklift vision systems were first introduced, they were expensive and didn't work particularly well. The technology was adopted from systems employed within military vehicles and the images seen in the cab were grainy, black and white, and looked like a view through a 'fish-eye' lens.

But, today, top-quality vision systems that eliminate the need to run multiple cables through the mast are very economical to install. These CCTV systems are capable of giving the operator a high-definition view of the forks and the load at any height – something inconceivable as recently as three years ago. As a result, many warehouse or DC owners and managers are questioning the need to put a man in the air for applications where full pallet load are being picked.

Travel speed is also greatly diminished when the operator is in an elevated position and this has a notable impact on the actual work cycles that can be achieved – despite complex height and travel speed control systems. Due to their size, these trucks are normally restricted to picking and putting-away duties within the racking, which means additional lift-trucks are required to deliver or collect pallet loads. This double handling is extremely time – and, therefore, cost – inefficient. WMS providers have therefore developed protocols and interfaces to control double pallet handling movements so product does not get 'lost' or misplaced at the incorrect aisle end. However, these systems come at a cost.

One of the most recent additions to the Flexi range – the Flexi HiMax – allows pallet loads to be stacked to over 14m high and employs a high-definition LCD CCTV system and laser height selector to ensure that the operator has a clear view of the pick, while maintaining a safe and comfortable operating position at ground level. Flexi articulated forklifts also eliminate costly and inefficient double handling because they are designed to operate like a forklift and can deliver pallets directly to the racking location allocated by the WMS in a single operation. A Flexi can therefore not only eliminate a forklift, but also cut direct labour costs by half.

So, 30 years on, 'man-up' trucks are now seen by many as a very inefficient and costly technology. They have been a feature of warehouse operations for nearly four decades but, for many applications, there are now more time- and cost-effective alternatives than elevating the man to the goods." **iVT**

NEWS FROM THE EAST



Ulsan, S. Korea – Hyundai Heavy Industries (HHI) has signed a strategic partnership with Atlas Weyhausen for the supply of road compaction equipment. Four models of single rollers (7 to 14 tonnes), and 2.5- and 3-tonne tandem rollers will be built by Atlas Weyhausen for release in emerging markets under the HHI brand from late 2013.

The move enables HHI to expand its construction equipment line, and Atlas Weyhausen to boost its sales via HHI's 500-plus dealer network in 150 countries worldwide.

Hunan, China – Zoomlion has continued to deny allegations of reporting fictitious sales and falsified accounts. "Their revenue growth relative to all their peers and the economic activity in China doesn't seem very credible," Kevin Barnes, an analyst at Kerrisdale Capital Management LLC, said in an interview.

Zoomlion chairman Zhan Chunxin first told reporters that the company achieved growth last year by gaining market share. The OEM went on to say it books sales strictly in accordance with its own revenue recognition policy and accounting rules, with auditing by Baker Tilly and KPMG. It said it sometimes also exchanges or replaces products due to defects and technological change.

The *National Business Daily* reported that while company documents showed a customer as having signed a contract for 15 pump trucks, he later told the newspaper he had only bought two. *(MOE)*

Pune, India – Wirtgen Group is to build pavers at the Pune plant that it recently opened to build tandem compactors. Details have not yet been finalised, but the OEM says the models will be smaller than the highway-class units it sells to India, and will be available in 18 months or so. It said it will decide soon what paving width it will build and that it will probably make the screeds in Germany.

Wirtgen's first Indian-made models were soil compactors, launched two years ago. It recently unveiled a 9-10-ton compactor built in India, the model HD 99/HD 109. *(MOE)*

Zhejiang, China – Hangzhou-based Good Friend's forklift sales for the four months ended 30 April 2013 plunged 35% from the previous year. According to AAStocks Financial News, the group sold 733 forklift units (2012: 1,252 units), valued at about US$7.7m, which is down from US$11.7m the year before. *(Forkliftaction.com)*

Houston, TX, USA – LiuGong Forklift is planning to appoint up to 12 dealers in North America by the end of the year and plans to add more in the future. LiuGong has established a plan that includes aftermarket sales programmes and services, operating manuals and parts support, due to the difficulty of complying with regulations such as those of the US EPA.

Globally the company's forklift business is 18% by unit volume, but by revenues it is less than 5%. *(MOE)*



Hunan, China – Sany Group chairman Liang Wengen was one of the 10 business and economic leaders named 2012 'Economic Person of the Year' by the Chinese television network CCTV.

The network cited the company's acquisition of Putzmeister, which made Sany the world's leading manufacturer of concrete pumps. CCTV also cited the decision by Sany-related Ralls Corporation to sue President Barack Obama after the US government blocked Ralls from developing a wind farm in Oregon. *(MOE)*

Washington, UK – The Tanfield Group has been fielding offers from potential buyers, including some from China, for the Snorkel aerial work platform business. The company is understood to have received a number of approaches about making an acquisition of its global aerial work platform business.



Houston, TX, USA – UniCarriers has completed the operational integration of the Nissan and TCM forklift businesses one year ahead of schedule. UniCarriers will change its company name to UniCarriers Holdings Corp and become the holding company of Unicarriers Group.

An attachment-producing division of Nissan Forklift, which was established in 1947, will now be integrated into the formerly TCM-owned Biwako Tech Corp. and will change its name to Global Component Technologies.

The new management of UniCarriers Holding Corp consists of Satoru Omori (president and CEO); Kazuki Kawabe, Hidetoshi Shibata, Hideo Arahata and Bunsei Kure (directors); Takeshi Sekine, Fumio Shibano and Hideaki Kubo (auditors). *(Forkliftaction.com)*

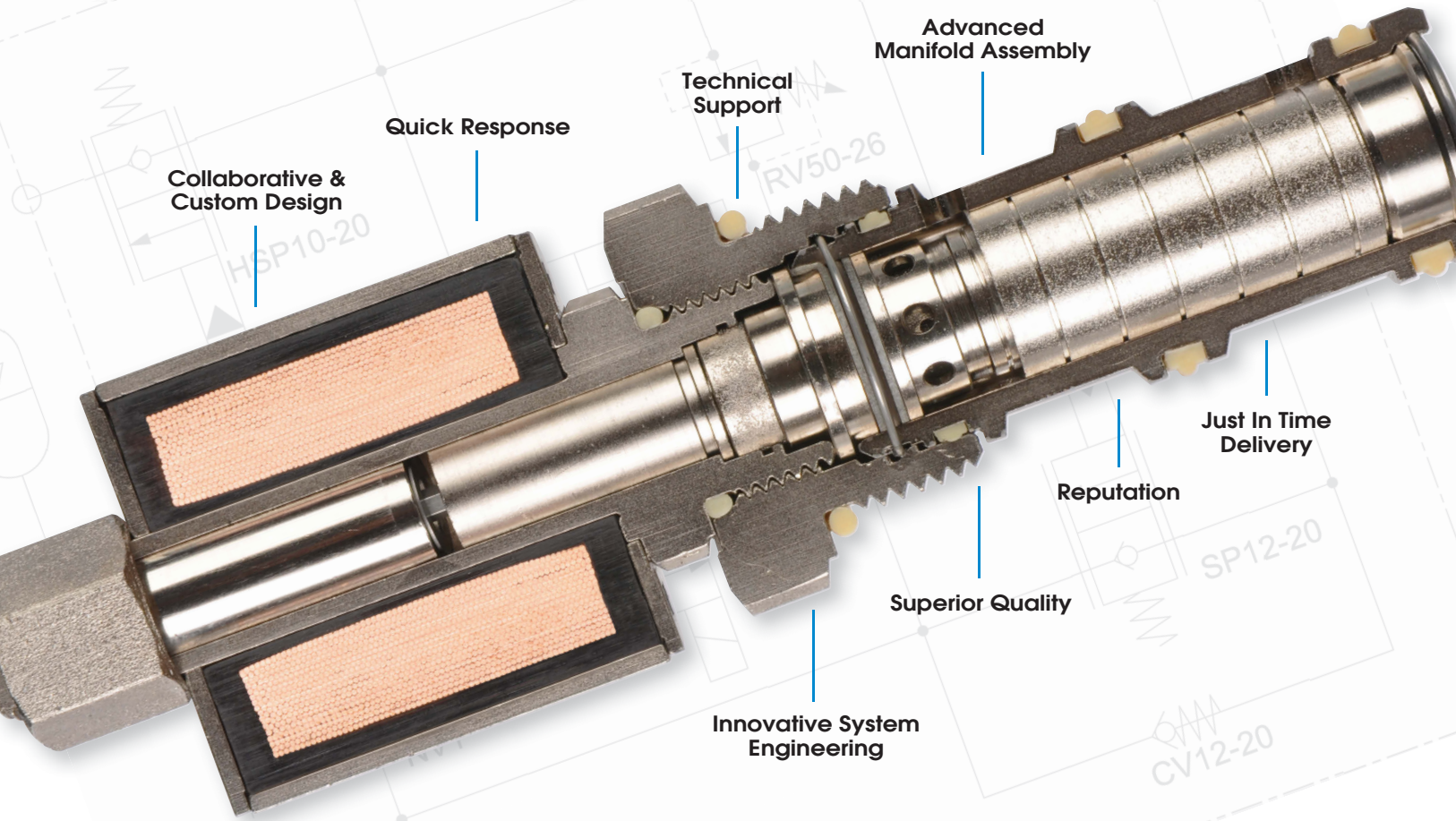

MORE THAN FLUID GOES INTO OUR HYDRAULIC CARTRIDGE VALVES.

HydraForce puts everything we've got into everything we make Gain an industry advantage with an innovative blend of engineering expertise, collaborative process, customized design solutions, and superior product performance. When you partner with the most focused electro-hydraulic controls provider, you'll power your operation forward.



HydraForce®
POWER FORWARD

Lincolnshire, IL, USA 847-793-2300 | Birmingham, UK 0121 333 1800 | Changzhou, China +86 186 2190 9398 | **hydraforce.com**

20 YEARS OF IVT: INTERVIEWS

SINCE 1993, *IVT* HAS SPOKEN TO MANY OF THE BIG NAMES IN THE INDUSTRY. HERE'S A BRIEF SELECTION OF INTERVIEW HIGHLIGHTS FROM MAGAZINES NOT IN OUR DIGITAL ARCHIVE – THE FULL ARTICLES CAN NOW BE FOUND ONLINE AT WWW.IVTINTERNATIONAL.COM

Once emissions and vibration legislation becomes just a bad memory, what will OEMs be worrying about instead?

MB: Machines today are still not optimised for every application and that's partly because they are designed for a range of different climatic conditions, operating standards and legal requirements. I'd like to think that there was a more integrated way of designing machines, so that you could move away from the traditional view of a wheeled loader being built up from an engine, cooling system, transmission, hydraulics and axles – there has to be ways of optimising that system. Because we own all those technologies, we're in a unique position to do it. In my days at Perkins, we had this idea that if you optimised the engine with the transmission and hydraulics, you could reduce the size of the engine, yet still provide the same performance. We're getting better, but we're still not where we need to be in terms of full integration.

A few years ago I went to one of the Formula 1 team constructors and saw some incredibly impressive techniques – they design the car to be structurally durable, but as light as possible, and then have the opportunity to add weight where they want depending on the type of circuit, driver weight, etc – it's that sort of flexibility we should adopt too.

MIKE BAUNTON, CATERPILLAR VP, MAY/JUNE 2007

System integration was a key topic at another Cat Round Table event six years later – see p22

Downsizing or 'rightsizing' has since become one of the sector's buzzwords

Nothing at the massive end of the scale has been launched yet – and sales figures are being closely guarded

In addition, the USA is also the gateway into Canada and the emerging markets in Central and South America – in the latter, JCB's sales have grown by 400 per cent over the last three years.

It is because of this huge potential market that JCB feels it needs to position itself to be able to maximise its potential revenues from these markets, with an initial target for this investment being to double its market share. In Sir Anthony's words, "We need to become American as far as Americans are concerned. We need to be seen to be an American manufacturer. We [illegible]n selling into these markets for the [illegible]ars and we have plateaued in [illegible]market share. We feel the only [illegible]an further increase our share of the market is to have a solid manufacturing

In the 10 years to 2012, unit sales in the region have grown by 75%, with skid steers up 300%, telehandler sales up 160% and RT forklift sales rising by more than 220%

presence in that continent." He added, "I think there are other advantages in addition to this – I would not want to make out that this is the only reason. For example, we are currently shipping thousands of machines across the Atlantic every year, so I believe that it simply makes sense for us to manufacture our products from a plant [illegible]hed within the largest single [illegible]world."

[illegible]de the decision to establish [illegible]lant, JCB acted quickly to [illegible]out. It was obvious that the [illegible]e on the east coast near a [illegible]or the shipping in of compo[illegible]gh local sourcing will be put in place for many of these, some will still have to be brought in from overseas. In addition, lines of communication by road

SIR ANTHONY BAMFORD, JCB CHAIRMAN, JUNE 1999

[illegible]e extremely strong in the USA and Northern Europe – for many years, about 25% of what we've built has been sent to North America – and now we're selling into markets that we didn't do before, such as Costa Rica and Hungary."

North America remains a prime target, with the company setting up its own distributors as well as collaborating with Vermeer. "We expect to double our first year trading targets of 1,200 tractors in the following year. To get even more distribution, we need bigger and bigger tractors. By introducing higher horsepower products, we can pull the rest of the volume along with it. We've already launched a 175hp model, a 200hp model by the end of the year, and a 240hp model is set for production by the third or fourth quarter next year.

"Eventually we will look at full powershift and CVT tractors. We intend to keep pushing those barriers. We know how technology's changing so we need to keep up with it, but equally we need to be conscious of supplying tractors to developing countries. We need to

ROGER PURDY, MD McCORMICK, OCTOBER 2002

The total market for tractors of this type in India (invariably about 35hp) comes to about 200,000 units a year. At full capacity, around 2003, annual output of the Indian factory will be about 35,000 tractors – making it among New Holland's biggest plants. "This is a huge market which we are very keen to enter," says Mr Quadrino. "Since the cost base for making tractors in India is fairly low, our plant could also act as a global source for these machines which we may be able to export to other countries."

In 2008, 10 years after the plant near New Delhi was set up, the 100,000th tractor was built there. It now exports to around 50 countries

A final area of farm equipment into which New Holland is putting a lot of development effort, as part of its keenness to maintain a leading position in the industry early next century is 'precision farming' – an area of equipment that fits in with the company's sales of combine harvesters, air seeders from Flexi-Coil, and post-emerge sprayers from partner Ag-Chem.

UMBERTO QUADRINO, CEO NEW HOLLAND, MARCH 1999



Together, we can set new standards – the indications are clear!

Parker now supplies users with an EO-3® fittings system for tube and hose applications that sets new standards in hydraulic technology. With a unique indicator ring for immediately visible assembly results. With compact construction, innovative nut design and taper thread, it's a new fittings standard. With impressively fast and simple assembly, even in restricted installation conditions. With a soft seal integrated in the cone for increased safety. Contact us right now.

aerospace
climate control
electromechanical
filtration
fluid & gas handling
hydraulics
pneumatics
process control
sealing & shielding

Parker

ENGINEERING YOUR SUCCESS.

www.parker.com/eo-3 0800 2727 5374 epic@parker.com

THE BEST OF BAUMA

bauma 2013



IF YOU WEREN'T ONE OF THE HALF A MILLION-PLUS VISITORS TO MUNICH THIS APRIL, YOU MISSED A TREAT. HERE'S JUST A HANDFUL OF THE HIGHLIGHTS FROM THE SHOW

Even if you did join the mass migration to Bauma this year, there's still a fair chance that you'll have missed out on something special while desperately trying to cover the entire immense showground. So, while by no means a comprehensive review, here's just a few of the things that caught the *iVT* team's attention.

An enormous booth is not necessarily a guarantee that there is actually anything special to look at, but Liebherr delivered spectacularly on both counts. It may have been the awesome T 264 mining truck and R 9400 mining shovel that attracted the crowds, but for us, it was the hybrids that really stood out – the **HS 8300 HD duty-cycle crawler crane** that we showcased in our March preview feature (p93), and the **R 9XX hybrid excavator concept**.



The HS 8300 HD duty-cycle crawler crane was featured in *iVT* March

Boasting reduced (rumoured to be 30-40%) fuel consumption and increased load-handling performance, the R 9XX incorporates both hydraulic and electrical energy storage devices, and is based around the structure and system architecture of a 40-tonne excavator. However, with an in-house engine producing just 160bkW, it requires a power source of approximately just 75% the size of that traditionally used in this category, as a result of the additional performance from the hybrid powertrain.

The R 9XX is a 'hybrid hybrid', using both hydraulic and electric energy storage mechanisms

Typical work cycles in this size class involve high-volume earthmoving and arduous tasks in quarries and opencast mines, and are promising applications for this hybrid concept. Newly developed by Liebherr's powertrain competence centre, the electrical devices comprise the slewing gear, an energy store using supercaps, and ECU, with a pressure reservoir and generator being used to recover hydraulic energy.

When braking at the end of a slewing manoeuvre, the kinetic energy is converted into electrical energy in the generator and stored in the supercaps, where it is ready to be released as soon as the superstructure begins to accelerate again.

The lifting cylinders are controlled without throttle valves, avoiding loss of energy before the recuperation stage is reached. When the boom is lowered, the energy released is stored temporarily by means of a hydro-mechanical energy generator in a hydraulic storage unit as well as the supercaps.

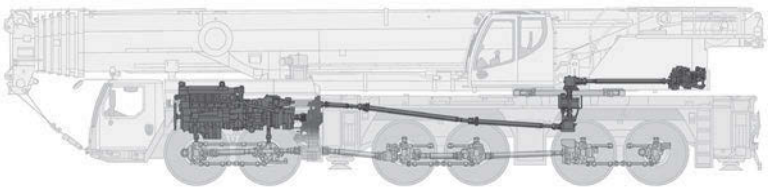

Liebherr's six-axle LTM 1300-6.2 features a greatly simplified driveline layout

Power from the engine can be supplied in the usual way, or sent to the electrical energy store before being supplied to the slewing gear or hydraulic pump drive. Energy can therefore be transferred between the various systems, ensuring the engine only needs to supply the minimum amount of power required. As a result, short-term peak power up to twice the nominal engine output can be made available.

As if that wasn't enough, the OEM also showcased its spectacular **L 586 XPower wheeled loader** with a continuously variable power-split transmission and a tipping load limit of about 20 tonnes. This driveline concept, which is planned for adoption across all of its large wheeled loaders, uses ZF's cPower technology to split the power from the engine between the mechanical and hydrostatic sections of the driveline for optimum performance at different stages of the duty cycle. When filling the bucket or driving slowly, for instance, the hydrostatic driveline dominates, but as speed increases, or during lengthy work cycles, the proportion of power that is transmitted mechanically increases. With the same principle existing in both forward and reverse, top speed and efficiency levels are identical in either direction.

The electronic transmission control system reduces energy losses even further, ensuring that the highest practical ratio is selected and enabling the engine to run at a lower speed. As a result, claims Liebherr, a higher load-handling performance can be achieved with reduced fuel consumption.

Another innovative – or should that just be 'simplified'? – drive concept could be seen on Liebherr's **LTM 1300-6.2 300-tonne telescopic mobile crane**. Rather than sticking with the traditional twin-engine approach – one of them used exclusively to power the superstructure drive unit – its designers employed a single in-house eight-cylinder 450bkW engine to do it all. Linked by a highly efficient mechanical shaft, low rpm in the chassis engine provides the superstructure with more than enough power for lifting work. Gear shafts are routed from the distributor gear in the substructure via two mitre gears through the centre of the slewing ring to the pump distributor gear in the superstructure.

As well as minimising fuel consumption, the removal of an engine also reduces the amount of maintenance work required. The reduction in weight can be compensated for with load-bearing components, thereby increasing the crane's load capacity.

A link to a video of the system can be found via the *iVT* website.

Not to be outdone, Liebherr's components division was showcasing an **advanced common-rail injection system** ideal for Tier 4 Final installations. Used in its own Tier 4i engines – from four-cylinder in-line to V12 configurations – since early 2012, the system will be made available to other engine manufacturers from 2014 onwards.

This modular system relies on four main components: high-pressure pump, pressure accumulator, injectors and ECU. The two-cylinder in-line pump can deliver 300 litres of fuel every hour at 2,000 bar. All pressure variations demanded by the ECU take place at the volumetric control valve, which supplies the pump with precisely the amount of fuel required.

Pressure generated by the pump is temporarily stored in 'high-pressure connectors', to maintain pressure stability effectively between the injection cycles. A non-return valve with a choke minimises the spread of undesirable pressure waves. However, a conventional continuous rail can be supplied if the customer wishes.

Unlike conventional systems, Liebherr's injector incorporates an additional hydraulic intermediate valve that closes the needle very quickly. And with an optimised injection sequence and a spray pattern perfectly matched to the shape of the combustion chamber, Liebherr is claiming 'significant' reductions in fuel consumption and emissions as a result.



Liebherr's advanced common-rail injection system will soon be made available to other manufacturers

iVT spent an interesting 15 minutes discussing future access options at the **D.LaPorte** booth with Mark Hartopp, UK sales manager.

One innovation that will shortly be seen on Volvo wheeled loaders, it seems, is an extension of the central locking system seen on modern cars. On approaching the vehicle, the operator simply presses a key fob to not only unlock the door but, with the addition of a gas actuator, make it swing wide open to simplify access. Hartopp pointed out that many falls occur when the operator is standing on the steps tugging at the door handle, so this solution could play a huge role in reducing accidents on the jobsite.

Another of the company's technologies that looks set for widespread adoption in the face of growing plant security concerns is 'palm reading'. Biometric sensors inside the door handle are able to detect whether the person attempting to gain access is the designated operator, and allow or restrict access accordingly.

The 'alternative drive concepts' from Wacker Neuson to which we alluded in our March issue (p93) turned out to be 'Plug&Play', a **dual-power option** for its 803 compact excavator. This features a mains-powered electrohydraulic unit (HPU) that can be used to power the vehicle as an alternative to the diesel engine for completely emissions-free operation, making it ideal for demolition work in confined indoor spaces.

The excavator can therefore be driven to the working area under its own 'steam' – in other words, a three-cylinder, 9.6bkW Yanmar engine – before being converted to emission-free operation. By integrating the hydraulic supply of the HPU into the undercarriage, the rear pivot radius and 360° rotation remain unaffected, while the variably adjustable hose holder provides optimal hose storage without limiting the operating range of the machine.

Due to the high cooling capacity of the unit, the 803 is claimed to be the first machine in this weight class that is able to be used without restriction in demanding demolition applications in ambient temperatures of up to 45°C. With high hydraulic performance being a key part of the original 803's development, attachments such as the breaker can be easily operated via the standard auxiliary hydraulics.

The new dual-drive concept is also planned as an option for the 1404 and EZ17 mini excavators.







Hamm vs D'Avino

The *iVT* award for most eye-catching vehicle came down to a toss-up between Hamm's classy HD compactors or D'Avino's striking 360 Delta 4 self-loading concrete mixer. We've already highlighted one of the German OEM's innovations on page 9, however, so the Delta sneaks it, with a design described by the company as "muscular, elegant, tough and refined".

Because visibility can be a problem for conventional mixers, the 4.5m^3-capacity Delta bypasses that by using a cab on a rotating frame, ensuring the operator has full visual contact with the drum outlet and



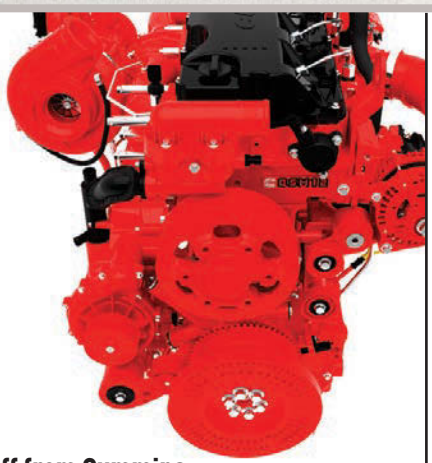

Little big stuff from Cummins

Offering plenty of scope for OEMs looking to downsize their engines, Cummins launched its impressive 512bhp (382bkW) six-cylinder, 12-litre **QSM12** that meets Tier 4 Final with an over 30% higher power-to-weight ratio than is typical for engines in this power range. Using the more compact envelope size of its QSM11 Tier 3 predecessor, its high-efficiency air handling and advanced combustion through the incorporation of its Xtra-High Pressure Injection (XPI) fuel system have allowed a return to the simplicity of a wastegated turbocharger – and the removal of the need for a cooled EGR system.

Major weight savings were a key design focus, boosting the QSM12's power-to-weight ratio through the use of a sculptured block that retains high rigidity while removing unnecessary mass. The use of composite material for the oil pan and valve cover has shed further bulk, resulting in an engine weight of just 862kg to enable a top-rated power-to-weight ratio of 0.44kW per kg.

The aftertreatment consists of a DPF and SCR. The SCR system uses a copper zeolite-based catalyst for over 95% conversion of NOx. The overall fluid operating cost for the Tier 4 Final remains lower than that of the previous QSX11.9 engine at Tier 4i.

Colour scheming from Dynapac

Something that gave us cause for a big double-take was seeing a whole range of yellow and grey roadbuilding equipment bearing the Dynapac name on the Atlas Copco booth. Long familiar with its red and yellow colour scheme, the brand has now been aligned with the visual identity of the other divisions in the Atlas Copco Construction Technique business area to provide a strong uniform identity for construction customers in all regions of the world. The addition of the Atlas Copco logotype on the equipment is also designed to benefit the group by making more brand carriers visible to the general public.

New launches in the new colour scheme included the CA1300 and CA1500 (pictured above) single-drum soil compactors, which complete the fifth-generation, and the CP274 pneumatic-tyred roller and F1200CS tracked paver (pictured right).





bucket assembly through the full 360°. This also reduces ground supervision and cycle times to a minimum.

Hydrostatically driven, with 4WD and 4WS, its top speed of 32km/h is courtesy of a turbocharged mechanical injection Stage IIIA Perkins 1104D-44TA engine delivering 83bkW at 2,200rpm, although alternative environmentally friendly powertrain solutions and electric propulsion are said to be also on the cards.

Two arms are better than one?

Speaking of beautiful machines, Hitachi didn't disappoint, with its ultra-short-radius compact excavators, in particular, drawing admiring looks – but the most unusual machine on display was its **twin-arm Astaco excavator**, with a 3.5-tonne mini excavator arm on the right, and one from a 5-tonne model on the left. Alluding to the similarity of the arms to pincer-like claws, the name is taken from the Spanish for crayfish, with the joystick control of both attachments enabling operators to simulate their arm movements through the machine.

This rarely seen machine was developed in 2005 and, following testing by the Tokyo Fire Department, has tended to be used in support of humanitarian rescue efforts



where it can carry out complex operations beyond the scope of ordinary excavators. Following the 2011 Japanese earthquake and tsunami, for example, it was used for removing containers in Ishinomaki and clearing rubble in Minamisanriku, grasping materials in one arm and separating them with the other.

Hitachi was also showing an interesting video of its **Trias three-pump hydraulic technology**, which we're hoping to host on our website soon, so stay tuned…

New graders from Terex

Aside from its hybrid material handler mentioned on p12, an eye-catching vehicle on the Terex booth was the TG 180 motor grader produced as a result of the joint venture with Russian Machines. Graders have long struck me as having the look of a gangly newborn giraffe, but there was something special about the design of this one – or of the rear engine (Deutz or Cummins) cover and cab, at least.

The Italian-designed ROPS and FOPS cab provides high levels of comfort and visibility, with 85% of its windows equipped with wipers. It also includes a control system with a convertible steering column that can be operated while sitting or standing, a high-power climate-control system, and an air-suspended seat.

With a range of operating weights from 14-24 tonnes, the four models offer high manoeuvrability via front-wheel steering with hydrostatic drive. Tough tasks can be handled with ease, courtesy of the NAF tandem bogie beam axles and fully automatic ZF transmission with a self-diagnostic function for ease of maintenance. A series of design improvements in the tools improve reliability and safety in humid tropical climates.



Hybrids from Atlas Weyhausen

Atlas Weyhausen, in conjunction with Deutz, Rexroth and Linde Hydraulics, showed two **start/stop diesel-hydraulic solutions** for compact wheeled loaders and rollers. The OEM's previous hybrid concepts have foundered as a result of a lack of economical, compact and robust storage batteries, so it has now turned its attention to the optimisation and system integration of the engine and hydraulic system in the form of a start-stop function to realise the same benefits of an electrical hybrid.

Working with Bosch Rexroth, Weyhausen and its engine supplier developed the 4.4-tonne AR 60 wheeled loader with a hydraulic flywheel system (HFW) to build up the required power reserve. The HFW consists of Rexroth's axial piston pump, control block, hydraulic accumulator and control unit, and is connected to the travel drive or working hydraulics with only basic components such as a tank, filter and cooling system. It briefly gathers energy and makes it available to the machine later as needed, whether as a boost – to support the Deutz TD 2.9 49bkW engine in the event of a power peak – or to power a start-stop function. Energy is therefore applied much more efficiently throughout the machine.



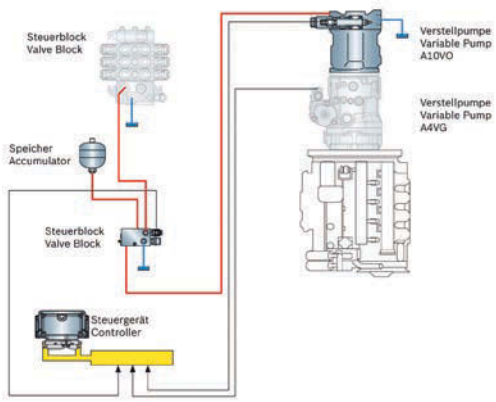

With the start-stop function, the ECU assesses whether enough pressure is available in the accumulator to restart the engine after it has been switched off, or makes an assessment of a consumer's potential energy needs while the engine is off. If the travel drive or work hydraulics require energy, the engine is immediately started using previously stored energy with virtually no time lag.

The solution developed in co-operation with Linde Hydraulics, for the AR 85e (pictured left), is another start-stop diesel-hydraulic hybrid system. A special hydraulic pressure tank stores surplus energy before it is released when the next demand is made on the Deutz TCD 3.6 80bkW engine, leading to a potential fuel saving of 20%. Once the tank has been filled and only idling signals are measured, the engine is shut down, before switching on again immediately when there is any activation of the steering wheel, accelerator or joysticks.

This technology is set to spread across the Weyhausen range, using Rexroth and Linde Hydraulics as preferred suppliers for hydraulic systems in the OEM's equipment.

A new interior design concept was also premiered, in connection with our friends at Lumede Design. Special attention was paid to harmonisation, using only three main colours and one pattern of cloth on the roof lining and seat. A new armrest integrates all the switches and the joystick, which offers both vertical and horizontal movement and has aided the optimised ergonomics and field of view. The enhanced steering column provides greater adjustability and has helped to open up the space in the cab, especially in the footwell. Better surface quality has also been achieved through the use of plastic parts sourced from Menschik.



bauma 2013

RICHARD CARR, iVT INTERNATIONAL

TAKE 5

...OF CATERPILLAR'S SENIOR MANAGEMENT TEAM, SIT THEM OPPOSITE A GROUP OF TECHNOLOGY EDITORS, AND WHAT DO YOU GET?

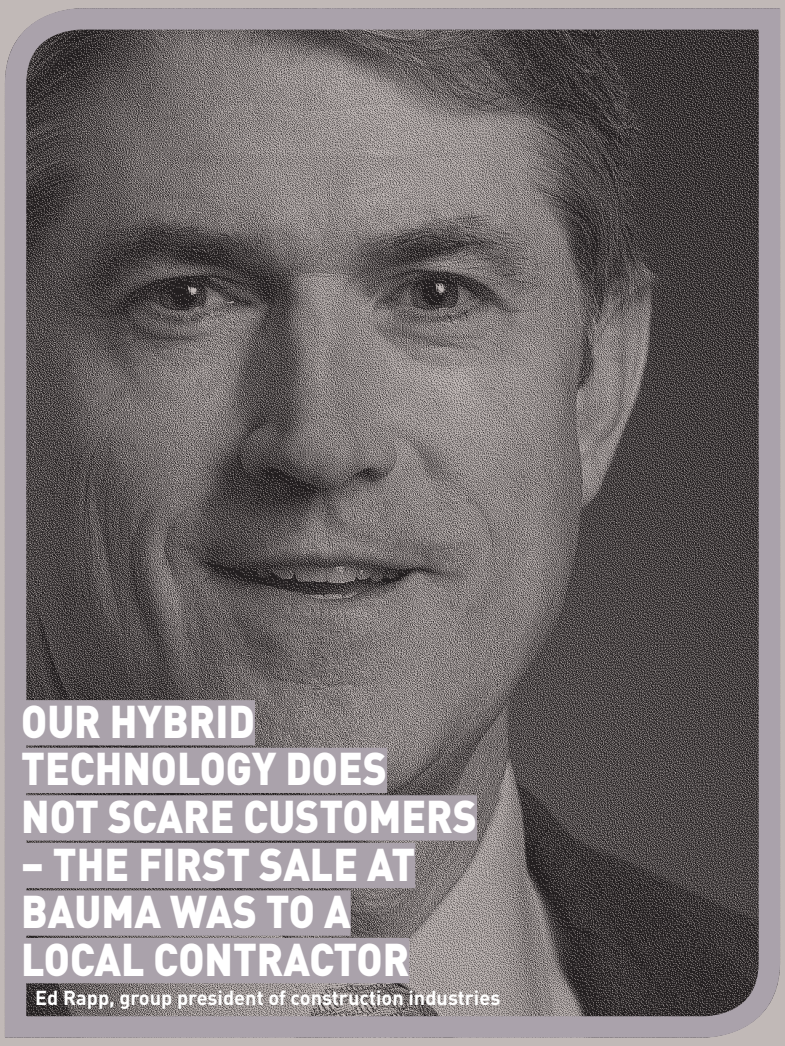

OUR HYBRID TECHNOLOGY DOES NOT SCARE CUSTOMERS – THE FIRST SALE AT BAUMA WAS TO A LOCAL CONTRACTOR

Ed Rapp, group president of construction industries

Caterpillar's Round Table event, where a handful of journalists are invited to chat with some of the company's top brass, is always a highlight of the first major construction exhibition of the year.

In the spotlight at Bauma this April were a group president and four VPs – namely Ed Rapp, group president of construction industries; Nigel Lewis, vice president for EAME Distribution; Gwenne Henricks, chief technology officer and vice president responsible for product development and global technology; Tana Utley, vice president responsible for the industrial power systems and growth markets division; and, last but not least, Hans Haefeli, vice president responsible for advanced components and systems.

So, glossing over the fact that the table 'around' which we were sitting was actually undeniably rectangular, what insights into current and future technologies could they provide?

You've said the 336E H hybrid excavator could well become a norm within three to five years. Where do you see that evolving next?

Ed: The technology is what you'd consider mainstream – it's what we already have. It's the marrying it together that's important. It's no longer about the pump and motor, the engine, the hydraulics ... it's now about the systems integration, especially with Tier 4 or the 336E H. If we'd talked about going to that level of emissions five or six years ago, we'd have agreed there would be a trade-off in the fuel economy. The reality of it is we're developing the cleanest engines and machines we've ever developed – all while improving fuel economy.

So the payback from this hybrid technology is going to be faster – customers see that as a trade-off that's worth the investment. But I think you'll see the utilisation more

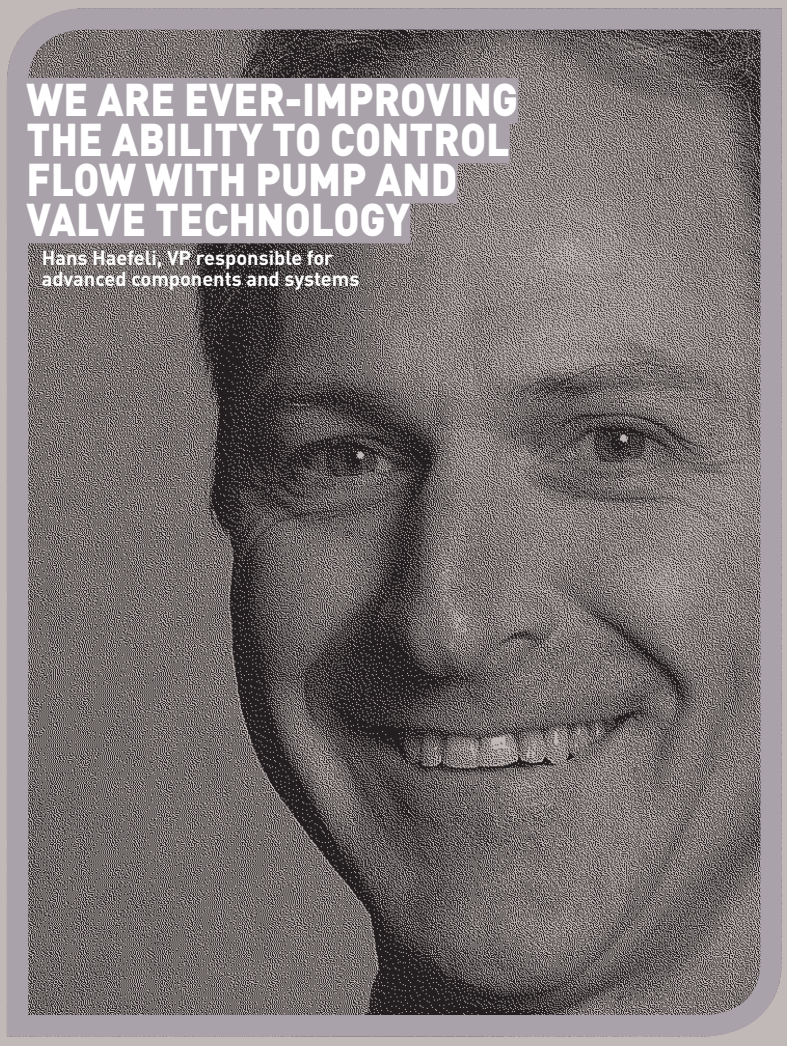

WE ARE EVER-IMPROVING THE ABILITY TO CONTROL FLOW WITH PUMP AND VALVE TECHNOLOGY

Hans Haefeli, VP responsible for advanced components and systems



ABOVE: **The 336E H hybrid uses already well accepted technologies to deliver huge operational savings**

on medium-to-large excavators because the payback is faster there than on the small side – about 18-24 months. I think the technology doesn't scare them either – the first customer that took delivery here [at Bauma] was what we would consider a local contractor, not some large machine customer.

Hans: There's a range of capabilities that could fall into the 'hybrid' category. It's all about providing the customer with the lowest, most productive outcome you possibly can. All of them help you to become more fuel efficient, more productive and so on.

I think what you'll increasingly see is a range of those different technologies being applied in the appropriate application. Because not every application will make the most out of the same kind of hybrid technology, so it does depend a lot on what a customer actually uses the machine for.

Ed: Actually, it depends most on what the customer is doing, because it's the application that is going to define the dynamics as to which solution is best. But it gets back to systems integration, and the ability to bring the solution that matches that customer requirement.

Are there any long-term plans for commercialising any of the technologies that Cat is developing, such as the hydraulic hybrid, either within this industry or transferred to another sector?

Gwenne: We already have a very good business through our OEM Solutions Group, where we'll commercialise technologies into other aspects of industry. So it's entirely part of the business model that we go through today.

Hans: We look out for opportunities to sell our components to third parties as well, where it doesn't conflict with our own business. For example, we sell our transmissions into the ag sector and that's very successful, because it doesn't compete with us so that works well. We also sell power units and transmissions into the fracking industry.

In 2011 we began a JV with Fast Gear, the biggest on-highway manual transmission manufacturer in China. So we worked with them, providing automatic transmission capability into this JV, which doesn't compete at all with what we do.

We're also leveraging Fast Gear's very deep capability on component manufacture, which we will bring back in-house at a very attractive cost. Those are the sort of opportunities we will always grab with both hands!

Do you plan to be more vertically integrated in the future?

Hans: We have a very clear vertical integration strategy in our component business – there is a series of very distinct tests that we put every one of our component sets through. We continuously run our components through that rule because things change, and we make our decisions based on that.

The last time Caterpillar did this comprehensively was 18 months or so ago, which has since driven us to change one or two things, but there has been no radical shift.

Ed: By going through that process it also enables you to be real clear with your supply base – which they like – because we're asking them to make an investment as well. If they're always guessing if we're going to vertically integrate or not, it's hard for them to make that investment.



WE SPEND A LOT OF MONEY AND PUT A LOT OF TALENT INTO MAKING THE HARDWARE, THE SOFTWARE AND THE SYSTEM INTEGRATION 'INVISIBLE'

Tana Utley, VP for industrial power systems and growth markets

RIGHT: **Cat launched the 301.7D CR mini excavator at Bauma – but it's not due for electrification any time soon**

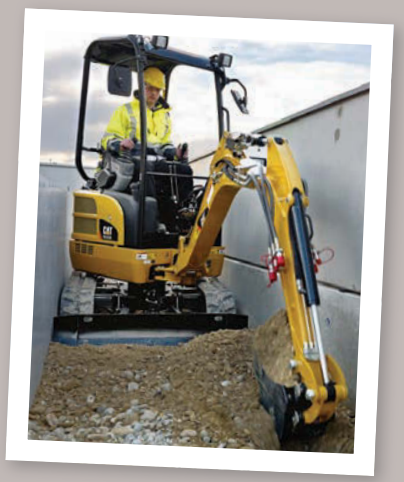

What sort of trends in engines and hydraulics are you seeing?

Gwenne: Customers are increasingly asking for greater power density, to use a smaller engine for better fuel consumption, where in the past we might have used a larger engine.

So the smaller end of Caterpillar's engine product line is now becoming increasingly important and appearing more regularly at the very heart of our core product lines. So I think the Perkins business is increasingly important to Caterpillar.

Hans: In terms of hydraulics, what we're working on is ever-improving the ability to control flow with pump and valve technology. Why is the 336E H able to demonstrate higher fuel savings? It's really a combination of three things; the pump working together with the valve and with the energy storage capability. So I would say precision in controlling flow is a big part of what we would always try and improve.



LEFT: **Compact powerful engines, like those from the Perkins Engines division, are becoming increasingly popular**

Have you spotted any trends, or demand, for the electrification of construction machinery, particularly compact models?

Ed: I think the challenge with it is the customer economics. If you look at the componentry needed to bring electrification to a mini hydraulic excavator or a compact wheeled loader, and then look at what the customer savings are in terms of fuel, at this point in time it just doesn't pencil out. That doesn't mean it won't pencil out over the long term – the price of all this stuff will come down, so there may come a time where that makes sense.

Is the increasing complexity of compact machinery – often an entry-level product – a problem for small contractors?

Ed: A lot of the technology that brings complexity is just what it takes to hit Tier 4. But I wouldn't necessarily say that small machine owners are less sophisticated – in some places we're seeing them just as interested in technology as some of the big guys.

One of the things I think we have an opportunity to do across our customer base, though, is to drive a higher adoption rate of technology in general across our industry. If you look back over the past 30 years in the construction industry, it's lagged many other sectors – and there are a lot of good reasons for that.

The reason we did a better job on Tier 4 is that instead of having each product group separate, we brought all the product groups together and looked for common solutions, leveraging multiple product lines to drive a higher adoption rate. That's where the opportunity lies – and I think it lies with large customers.

Tana: When we talk about the impact of smartphones, we don't get all wrapped up in the technology that makes them happen, but in how we use them to make our life better. So we spend a lot of money and put a lot of talent into making the hardware, the software and the system integration 'invisible'.

Gwenne: A customer buying this kind of equipment is usually getting out of a car that has a high level of technology behind it, so that's the frame of reference.

The other thing I'd add is that we spend an unprecedented amount of



THE ECONOMICS OF OUR CUSTOMERS' INDUSTRIES ARE DRIVING THEM TO BECOME MORE SOPHISTICATED

Nigel Lewis, VP for EAME Distribution

attention and focus on training our dealers, giving them the capabilities and the tools that they need to support our customers well.

Nigel: We were at a dynamic where our customers – if you look at their economics and how they've evolved over the last 10 years – haven't really evolved that much in terms of productivity. So they've got a great opportunity and the economics of their industries are really driving them to become more sophisticated.

Finning in the UK and Ireland has set up its own network of dealers to sell compact machinery. Is that a business model you plan to replicate elsewhere?

Nigel: That's an evolution of our standard distribution model – a lot of the customers for compact equipment work in segments that are highly dispersed, and not necessarily concentrated around a Caterpillar dealership. So far, the results are very positive. Customer loyalty is good and very encouraging, so we're seeing it also being adopted by other dealers. We'll probably work to replicate it in those markets where it makes sense.

It's not a question of overlap – these are agricultural customers, for instance, who often go to a different location to get what they need.

Autonomy is becoming popular in the more dangerous applications, such as mining, but in what other applications could you leverage the technology?

Gwenne: When we began on our automation journey, we developed technology building blocks and incorporated those into our machines in multiple applications. AccuGrade was one of those early building blocks, and a lot of the operator-assistance features we have built in to our products are among the building blocks that we then added on our road map that's brought us to the point of autonomy. Over time, I see us continuing to apply these building blocks again, where it adds value and can really drive the benefit that the customer needs.

BELOW: **A new distribution model in the UK for compact machinery is opening up new opportunities for Cat**



Ed: I would probably use the term 'high cost' rather than 'high risk'. The safety record of the mining industry, for example, is outstanding – the challenge is that most of the sites are in remote locations with a huge cost structure. The other thing is there's a fairly repeatable cycle in terms of the application.

In general construction, the high variability of the job – and of what the machine does – means it's less viable in that kind of application. But I think the big leap is when you can knit together everything on a job site and turn it into a system.

Tana: Other factors could be a high labour cost or if people don't want to work somewhere because it's very remote or because it's yucky – who wants to drive a landfill compactor?! That's a repetitive task, so we've added some form of autonomy to that. If there's a value proposition in an industry outside mining, it would be in something like that.

We're entering an era here where all the technology that we're bringing to bear is going to help our customers take a giant step forward in their productivity. It's going to make a big shift for some of the market segments where it's introduced.

With the increasing amount of electronics and software that's going into these machines, how worried is Cat about cyber security, in terms of equipment as well as business intelligence and intellectual property?

Ed: From an IT security perspective, we take it very seriously. Whereas once the strategy was to create a firewall to keep them out, I think now you have to work off the base assumption that they're in and you're trying to figure out where they're in, how they're moving around, and how you protect it.

Hans: Moving to areas like automation, automated machines, remote control machines, all the capabilities that come with telematics, data transfers and so on, does open

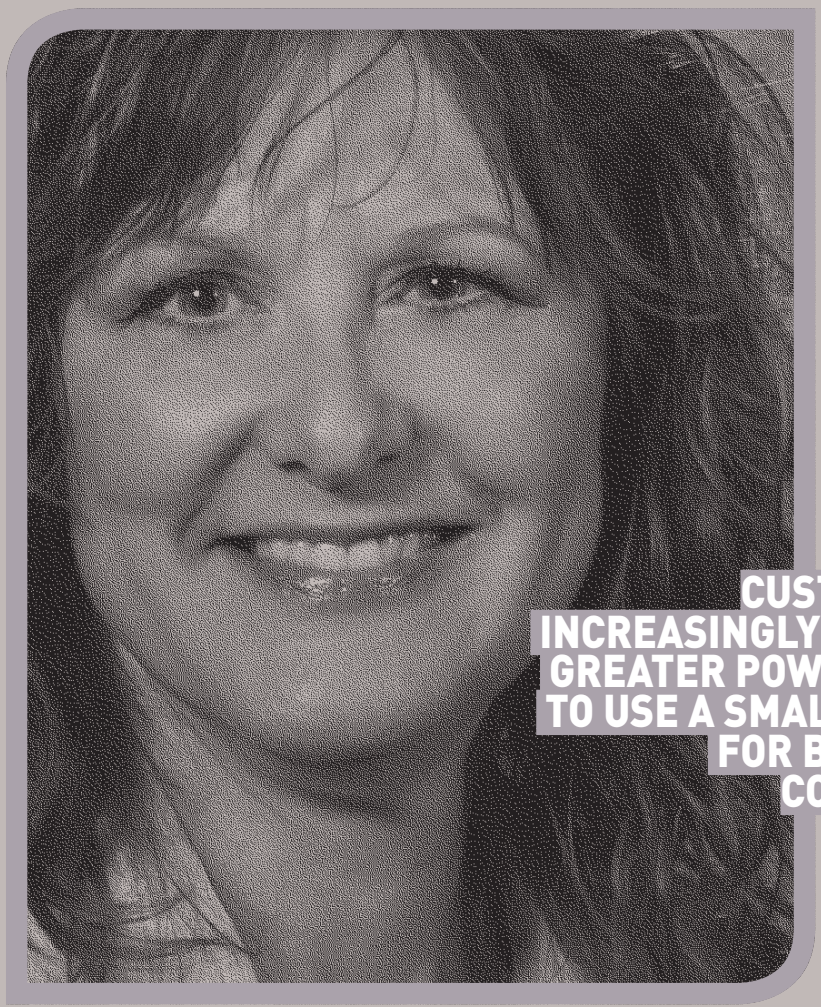

CUSTOMERS ARE INCREASINGLY ASKING FOR GREATER POWER DENSITY, TO USE A SMALLER ENGINE FOR BETTER FUEL CONSUMPTION

Gwenne Henricks, chief technology officer and VP responsible for product development and global technology



RIGHT: **This Cat 793 mining truck recently successfully completed an 18-month-long autonomous truck trial at BHP Billiton's Navajo Coal Mine in New Mexico, USA**

up areas of potential risk. So we put a lot of effort into making sure that we have the most robust systems to keep those paths of communication high-tech. So I wouldn't say we're worried about it – but it's something we're very aware of and there are very effective ways of making sure that you retain the necessary skills.

Are you as comfortable with your strategy in Asia as you were three years ago?

Ed: There's no doubt China is going through tremendous cycles – we've been through periods where we went a couple of months without a single order. But I think that in the long term, we'll look at the slowdown in China in 2012 as the best thing that ever happened to this industry. In 2010 and 2011, there were a lot of people adding capacity, a lot of new entrants into the business, and a lot of financial terms being offered into the marketplace that just weren't sustainable.

In terms of our strategy, I think we're very comfortable with where we're at. There are five key issues. First, I think we're going to win long term in China like we win in other places – by having great local leaders.

Number two, we'll continue to systematically build out a business model, right the way from the development of the components to our manufacturing facilities, to the product development in our local design centres, to the manufacturing footprint, to the dealer organisation, to the build-out of our financing and logistics.

Number three is to be a market leader – I look at China and I think the industries that have really got hurt are those that have stood by the wayside. Fourth, we want to ensure a good return for our shareholders over the cycle.

And fifth, we want to be a good local citizen, where people look at us as a local company, not just as an international brand. So yes, I'm very comfortable with the strategy we're going through.

Will the SEM products become a value brand through a separate dealer network?

Ed: No – and it depends on what your definition of value is. We break it into three segments – a lifecycle, 'utility performance' and 'utility value'. I consider the first two to be Cat attributes, and utility value (mainly a price barrier), SEM's. So I don't see SEM gravitating up the value chain into utility performance, etc – that's what we've got the Cat brand for. In the early days, there was probably the view that customers in the utility value segment would rapidly migrate to utility performance and lifecycle – that migration in some markets is going to take a bit longer – and I think SEM has a role to play in terms of filling that need.

Will they ever use a Tier 4 engine? Tier 4 was one of the issues at the China Development Forum that Doug Oberhelman [Cat CEO] and I attended, and which we encouraged. The Chinese government has talked a lot about environment being a key issue: our response has been, "There's technology available today. We can build it locally."

I think they acknowledge the fact that they've got to address these issues if they want to be in a position of relevance in the eyes of the local population, so I would be reticent to underestimate their ability to deliver.

They have the ability to produce ULSD, it's just a question of putting in the infrastructure to make that happen. The question is, will they do it in tiers – i.e. start with the major cities in the east and then phase it in? That's what they're starting to look at in automotive – and I think that will give us a good insight into what will eventually happen with construction. **iVT**



INNOVATION
EXPERTISE
VALUE

C13 ACERT™ | TIER 4 FINAL / STAGE IV | 287- 388 BKW (385 - 520 BHP)

Caterpillar has a full range of industrial power solutions. Developed by a skilled team of experts, our industrial engines offer customers increased value through better fluid efficiency and longer component life. Don't settle for anything less than a Cat® engine. **See more at catindustrialpower.com**

BUILT FOR IT.™

CAT®

CAT, CATERPILLAR, their respective logos, ACERT, BUILT FOR IT, "Caterpillar Yellow," the "Power Edge" trade dress, as well as corporate and product identity used herein, are trademarks of Caterpillar and may not be used without permission. © 2013 Caterpillar. All Rights Reserved.

Design Challenge

DESIGN A SUSPENSION SYSTEM THAT WILL IMPROVE THE STABILITY OF A CONSTRUCTION OR AGRICULTURAL VEHICLE ON SOFT OR UNEVEN TERRAIN

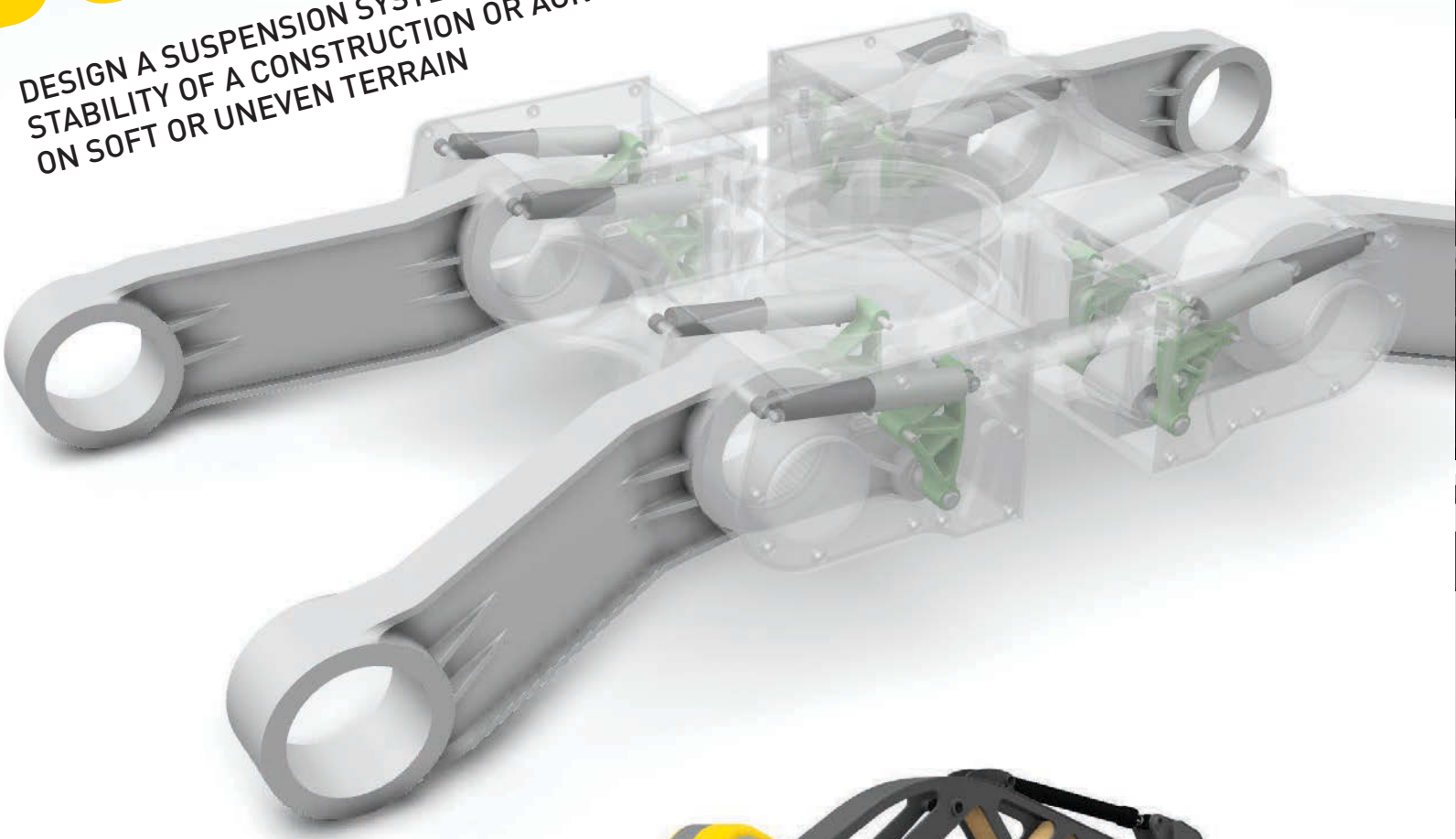



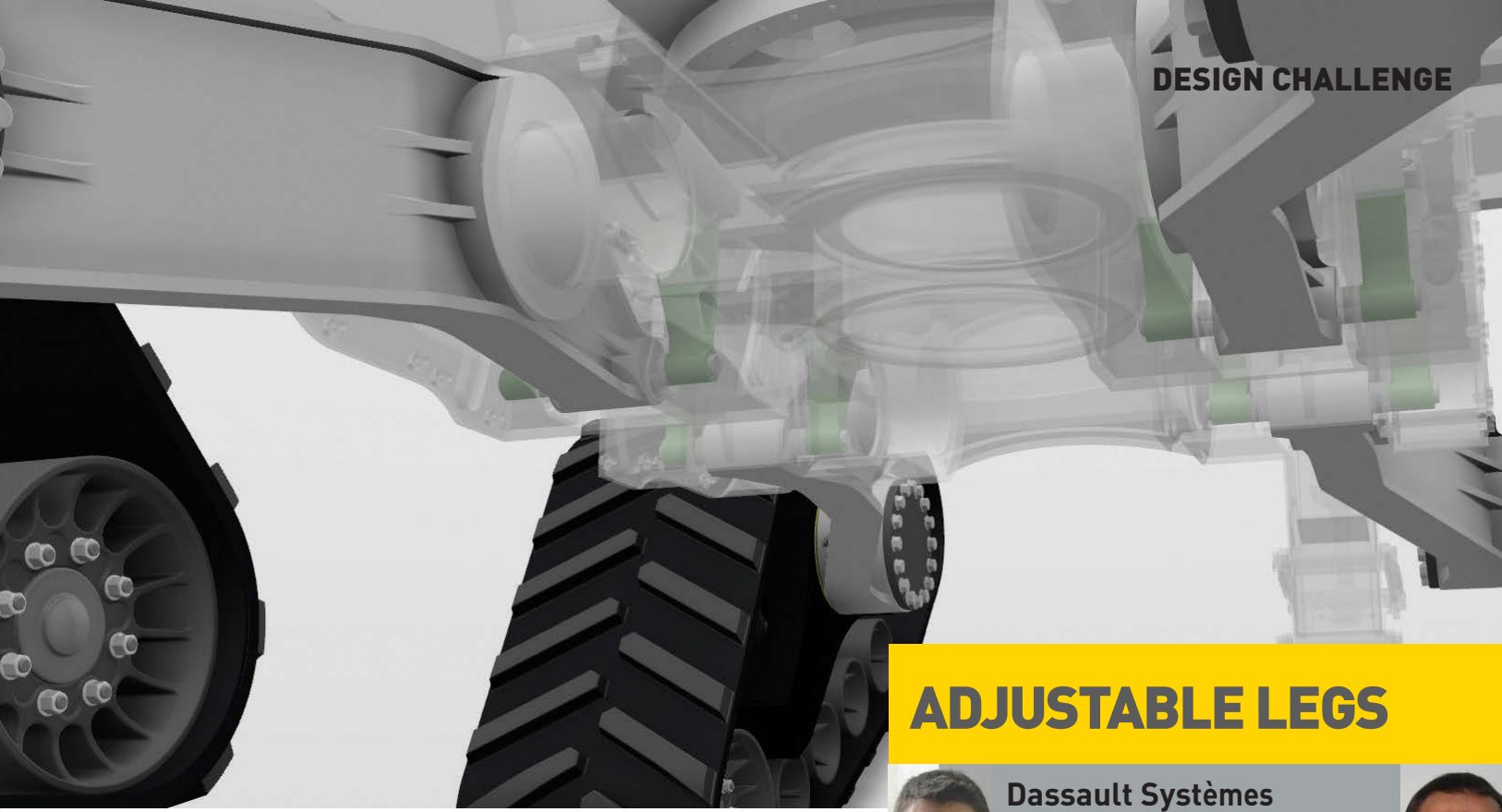

ADJUSTABLE LEGS



Dassault Systèmes

Julien Treillard (M. Eng) is solution technical manager in the DS Industrial Equipment dept, which he joined in 2000. Alexandre Pichkurenko is a solution technical apprentice engineer



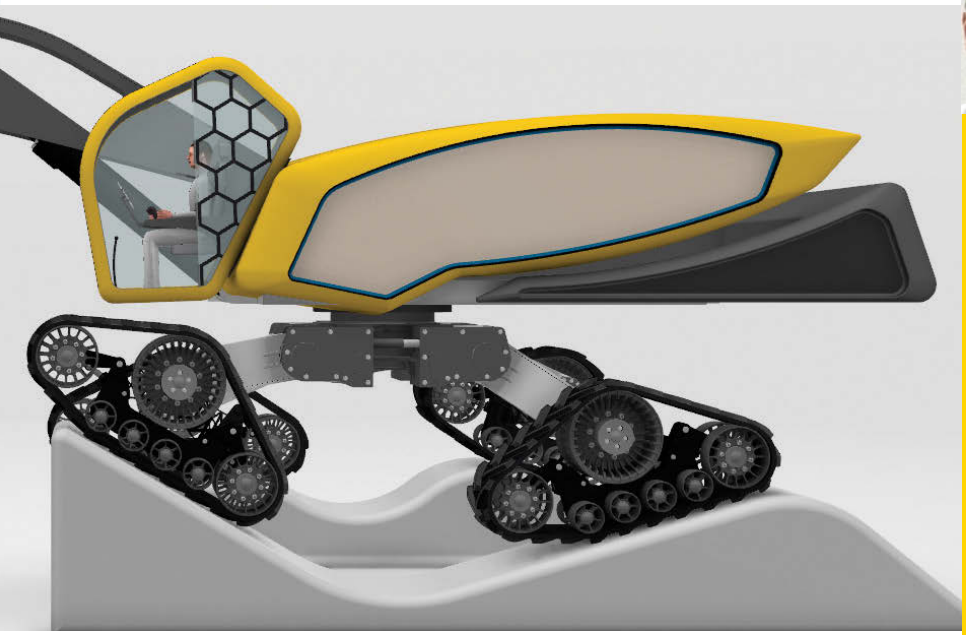

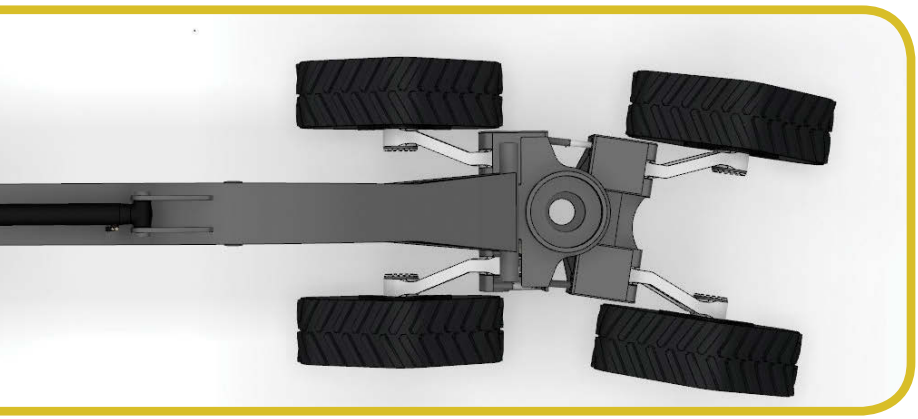

The DSExcavator (Dassault Systèmes Excavator) was designed for medium to large job sites, for use by general construction and civil engineering companies in sand and gravel quarries. It should therefore be able to safely and easily move on soft and uneven terrain.

Most serious excavator accidents arise when they climb a hill, when mishandling can cause the reversal of the machine. So the DSExcavator features intelligent systems to help maintain stability. Firstly, it can move its centre of gravity throughout the working activity. During travel mode, stability is ensured by the frame's four independent legs, which are supported by an active hydraulic suspension. The frame is also provided with a central articulation shaft to simplify driving operations by improving the steering angle.

At the heart of this system, an ECU (ESC) constantly monitors the height of each leg to manage the levelling of the main body. The theory of this operation is simple: each leg can move up and down via a couple of dual-effect actuators. When a gyroscopic sensor fixed on the upper frame detects a significant tilt, the ESC software will modify the necessary hydraulic pressure in each circuit, actuating the height of the legs. The actuators that provide the suspension are not in direct contact with the legs, but are connected to a triangular structure that enables both a better course (coef. x2) and a more compact system. This triangle can slide on one of its three corners to enhance the suspension efficiency. This system is highly secure – in the event of a hydraulic failure, the cylinders expand under the excavator's weight and the vehicle slides smoothly down. Ground clearance ranges from 680mm in its lowest position, to 1,120mm at its maximum height.

During work mode, the four crawlers provide good support on the ground, but the excavator could still be unbalanced by the bucket's weight and movements. A moving counterweight to the rear therefore provides extra counterbalancing for greater safety. The movement of the counterweight is controlled in real time by the ESC.

To decrease CO_2 emissions, the DSExcavator is a hybrid vehicle, with a diesel engine feeding the hydraulic pumps during work modes, and the electric motors inside the crawler hubs when in travel mode.

All mechanical parts, kinematic movement and mechatronic systems of this project have been designed and validated using Dassault Systèmes' 3DExperience solutions.

www.3ds.com/solutions/industrial-equipment/overview

julien.treillard@3ds.com • oleksandr.pichkurenko@3ds.com

VALUES FIRST. FASTER®

INNOVATION TECHNOLOGY RESEARCH SAFETY COMMUNICATION LEADERSHIP

FASTER®
think faster



CHINA - FASTER HYDRAULICS CO, Ltd.
200233 SHANGHAI, P.R. China
n° 1289, Yishan Road, Caohejing Hi-tech Park
(+86) 021-6082 3060 - Fax (+86) 021-6082 3080
info@fasterchina.com.cn

INDIA - FASTER HYDRAULICS Pvt. Ltd.
410501 DISTRIC PUNE, MAHARASTRA, India
Plot n° 10, gate n° 108 Ambethan, Taluka Khed
(+91) 21 356 7800
info@fasterindia.com

HEADQUARTER:
ITALY - FASTER S.p.A.
I-26027 RIVOLTA D'ADDA (CR) Italy
Via Ludovico Ariosto, 7
(+39) 0363-377211 Fax (+39) 0363-377333
info@faster.it

www.faster.it

BRASIL - FASTER DO BRASIL
R. José Franklin de Moura, 25
Independência Taubaté - SP CEP: 12031-290
(+55) 12 3026 9699
info@fasterbrasil.com

USA - FASTER Inc.
MAUMEE, OH 43537-9505
6560 Weatherfield, Ct.
(+1) 419-868-8197 - (+1) 800-231-2501 Fax (+1) 419-868-8360
info@fasterinc.com





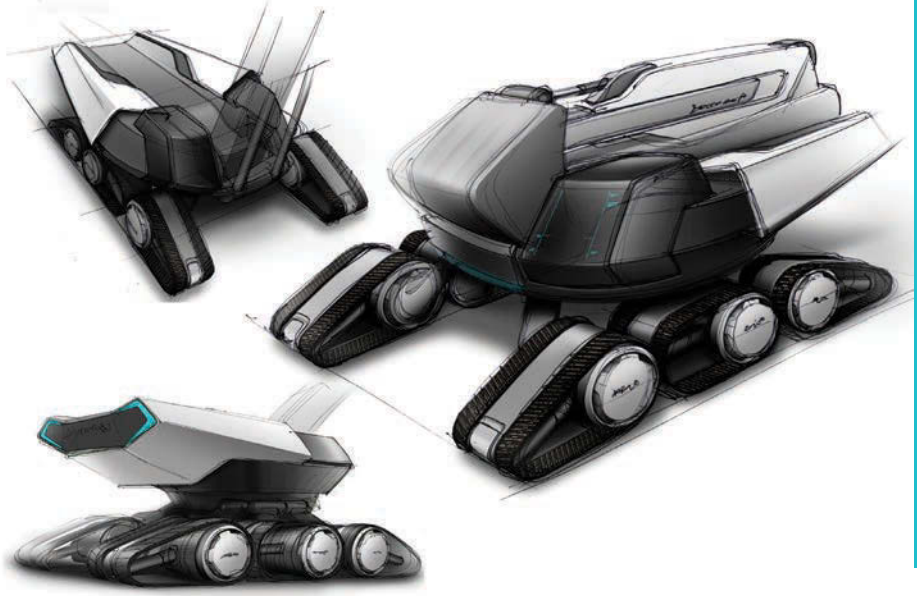

INDEPENDENT CRAWLER WHEELS

tangerine/HHI

tangerine has delivered groundbreaking innovation and design for over 20 years. It works closely with clients such as HHI to produce the best possible design solutions

Futuristic, cutting-edge and using the latest fuel cell technology, the Hyundai Heavy Industries (HHI) HF (Hyundai Future) Excavator is part of the South Korean giant's bold vision for the future. The crawler can transform its shape through the use of the independent crawler wheel suspension system, keeping the machine balanced in the most rugged of conditions.

The spectacular machine, designed by HHI in partnership with design house tangerine, may look like it would be more at home on the set of a science fiction movie than a building site, but HHI believes it will be a pioneer of future construction industry equipment. Each of the excavator's expandable four legs operates independently, making it highly adaptable for work on any terrain. Sensors recognise obstacles within the operating radius and the warning light system ensures the highest level of safety in soft, hard or uneven conditions. Having four suspension systems moving individually also ensures the operator's comfort whatever the conditions, while a satellite networking system allows for a constant exchange between operator and control centre so that tasks can be completed safely and quickly.

An extra stone-breaking feature has been added so that excavation and rock fracturing can happen at the same time – with the obvious potential for reducing working hours. A dual rock breaker is 'hidden' inside the arm, and when it is required the bucket slides up and the breaker slides down – ready for use.

A folding boom makes it easier to drive the excavator through tunnels or on highways. These space- and energy-saving features fulfil HHI and tangerine's challenge to maximise user safety and work efficiency with minimal environmental impact.

www.tangerine.net • mail@tangerine.net

ELECTRO-RHEOLOGICAL FLUID





Brooks Stevens

Tou Yia Thao has been an industrial designer with Brooks Stevens in St. Paul, Minneapolis, for two years; mechanical engineer Joe Knutson has also worked there for two years

The BSI Magneto forest harvester is a versatile machine that leverages new technologies to ensure smooth, comfortable operation, leaving the operator to focus on the safe and efficient operation of the vehicle. The main suspension uses a substance known as electro-rheological (ER) fluid, whose viscosity can be modified by the application of electric current. The arms have two translucent cylindrical-section aluminium-oxynitride reservoirs filled with ER fluid at each joint. The reservoirs have a fixed wall on one end and a sliding piston on the other, with a valve and flexible membrane in between. When servo-motors on a pivot axis start moving, the valve opens and the pistons force fluid from one side to the other. When the desired position is achieved, the valve closes and the motors power down. The flexible membrane allows limited articulation of the joints in the absence of applied power. The damping and spring effect of each joint can then be dynamically altered by modifying the viscosity of the ER fluid via the application of electrical current through the reservoirs. As the vehicle moves over terrain, sensors on the tracks and throughout the arms feed data to a control system that varies the applied current to soften or harden the fluid as needed. The mounting points on the chassis are able to rotate and pivot on two axes by hydraulic actuation, while the articulation of the arm itself provides rotation in the third axis, as well as a linear displacement.

The vehicle tracks can morph into multiple configurations, including circular wheels and elongated tracks. Their internal structure is similar to that of the main suspension arms, with electric motors at each pivot joint that drive rollers to move the treads. The tracks are connected to the arms by ball joints that are locked by spring force. They may be freed by a solenoid during main arm articulation, allowing for re-orientation and then re-clamping prior to vehicle motion. There are also pivoting blades, or paddles, embedded in each tread that can be rotated out, enabling them to dig into softer terrain or to assist whenever traction is otherwise insufficient. The internal surfaces of the tracks are made of an abrasion-resistant ballistic-weave aramid fabric held taut by spring steel bands that maintain the desired shape across track configurations.

The cab is levitated and constrained by four sets of rare-earth permanent magnets – for more details, see the *iVT* website. A high-efficiency gas turbine generates power to drive the track motors, as well as the electromagnets, suspension arm servos, and other vehicle subsystems.

www.bsiproductdevelopment.com • info@brooksstevens.com



Pivoting blades on the tracks further enhance traction in softer terrain



HUBLESS WHEELS



Brooks Stevens

Dale Di Iulio has been a senior industrial designer with Brooks Stevens in Wisconsin for 15 years; Scott Micoley has been an industrial designer and programme manager there for 23 years



The High-Wheel Lynx is a selective tree harvester concept based on large-diameter wheels that enable the vehicle to negotiate rough terrain and high obstacles. To reduce the loss of visibility, the vehicle uses a hubless wheel design with an open centre that gives the operator a clear sightline through the tyre, improving operation and safety performance.

The vehicle's wheels are suspended on hydraulically articulating arms with approximately 70° of movement, enabling each wheel to adjust independently based on terrain requirements. A sophisticated monitoring system reads the terrain and the vehicle dynamics to automatically optimise the position of each wheel on-the-go for a smooth ride and a stable operating platform. This feature also means the cab can be lowered for operator ingress/egress and service, as well as a reduced trailer transport height.

The versatility goes even further – each wheel has the capability to rotate around its off-centre drive hub, thereby providing unique options for greater ground clearance, as well as the ability to maintain its centre of gravity on steep hills or while traversing side slopes.

Primary steering is achieved with an articulated body, with each wheel also capable of turning independently. This enables a reduced turning radius and, by turning the wheels in opposite directions, the vehicle can turn on a dime in tight spaces.

www.bsiproductdevelopment.com • info@brooksstevens.com

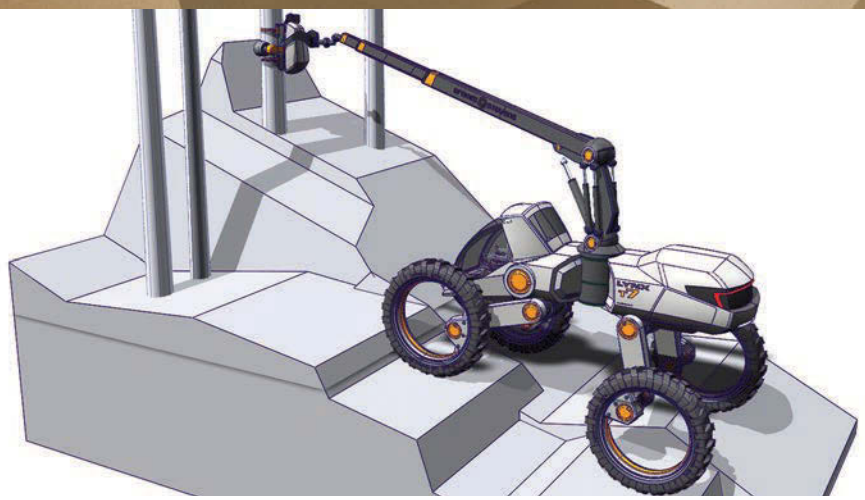

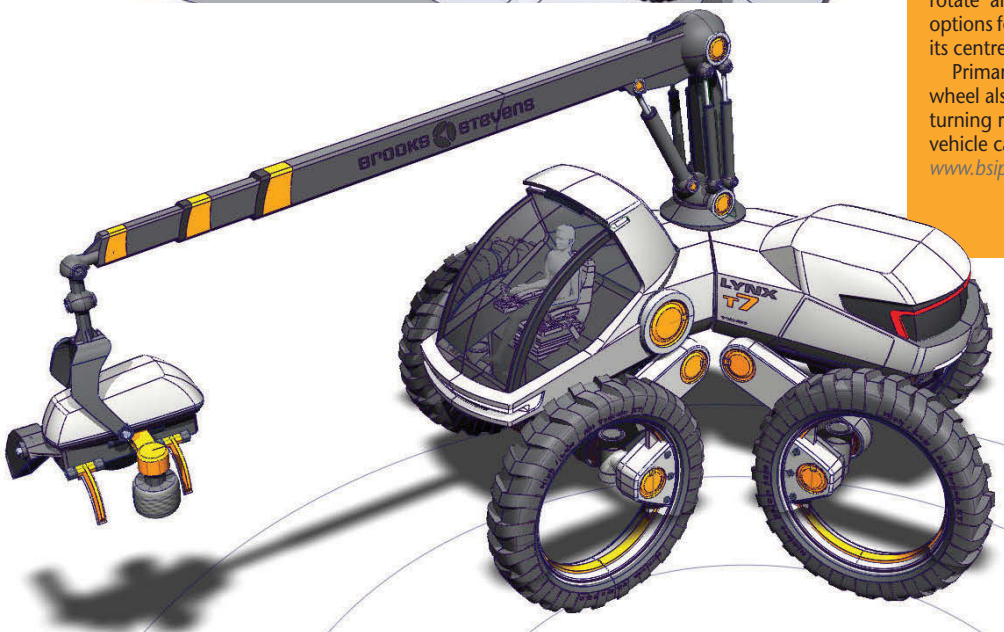

ON THE WEB

For much more detailed explanations, extra images and desktop wallpapers, visit:
www.iVTinternational.com

For Mining and Construction Vehicles:

- \+ Fire Protection
- \+ Reliability
- \+ Exhaust Aftertreatment
- \+ Noise reduction
- = Thermamax!

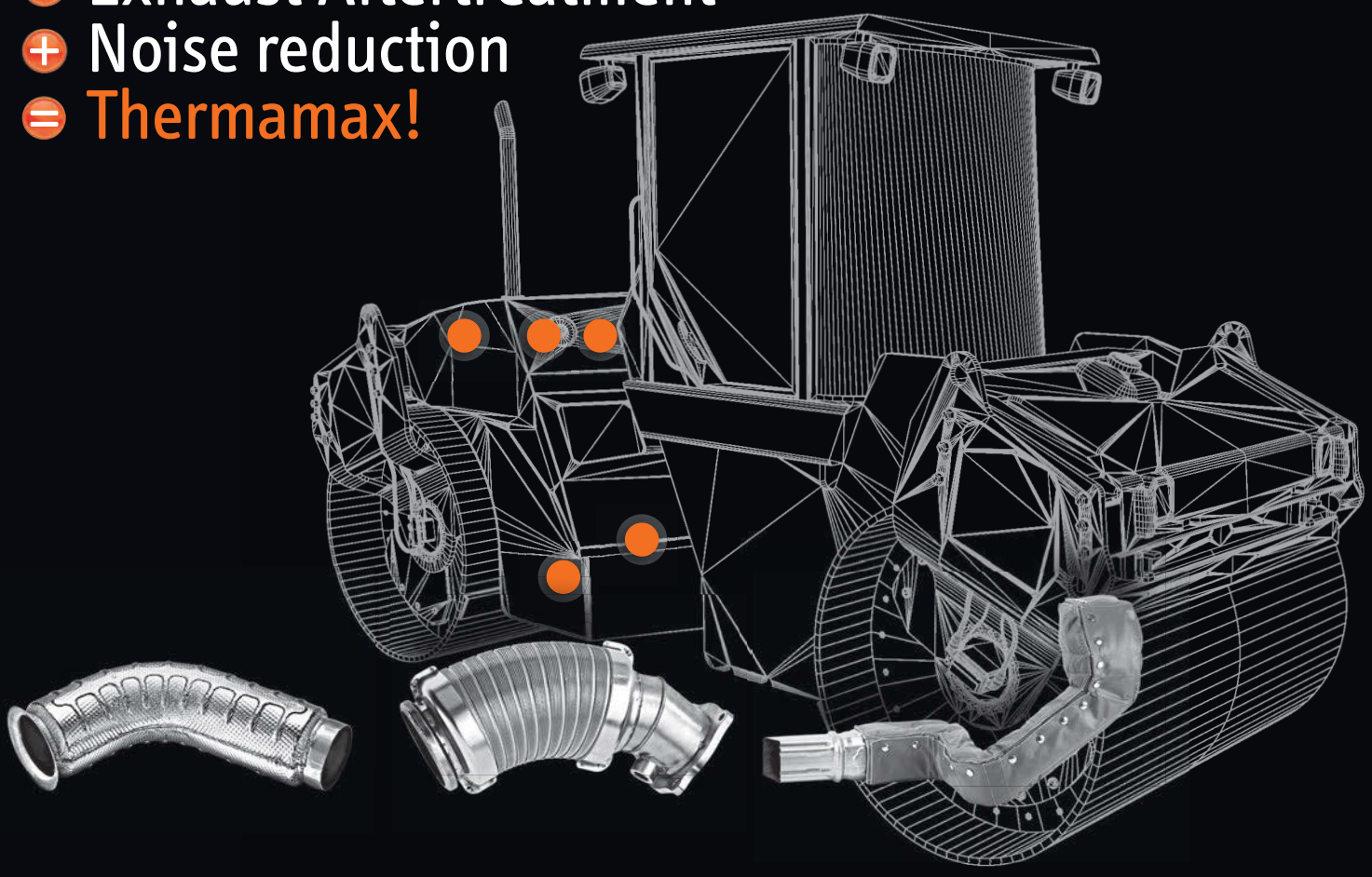

Leading brands around the globe benefit from Thermamax solutions meeting current and future requirements: We deliver highly efficient and cost-effective insulation solutions for mining and construction vehicles in whatever style and shape is needed – from development stage through to large series-production runs. Do you have a current problem that needs solving ?

Contact us for more details!
info@thermamax.com | www.thermamax.com

Thermamax.
Leading technologies for Off-Highway applications.

tmax

(Understanding Temperature.)



ELECTROMAGNETIC SUSPENSION



Ahmet Togay

As cab structure and industrial design team leader at Hisarlar, Ahmet has worked on projects for Tafe, Sonalika and AGCO in the last two years. Other clients include Terex (Schaeff & Fuchs), Mecalac and Fayat

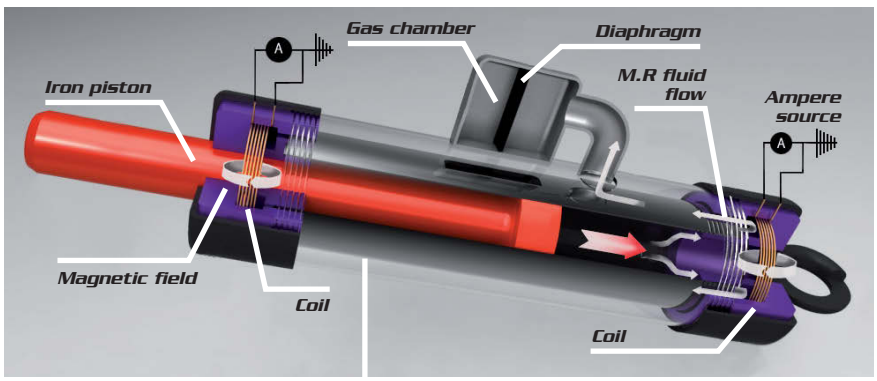

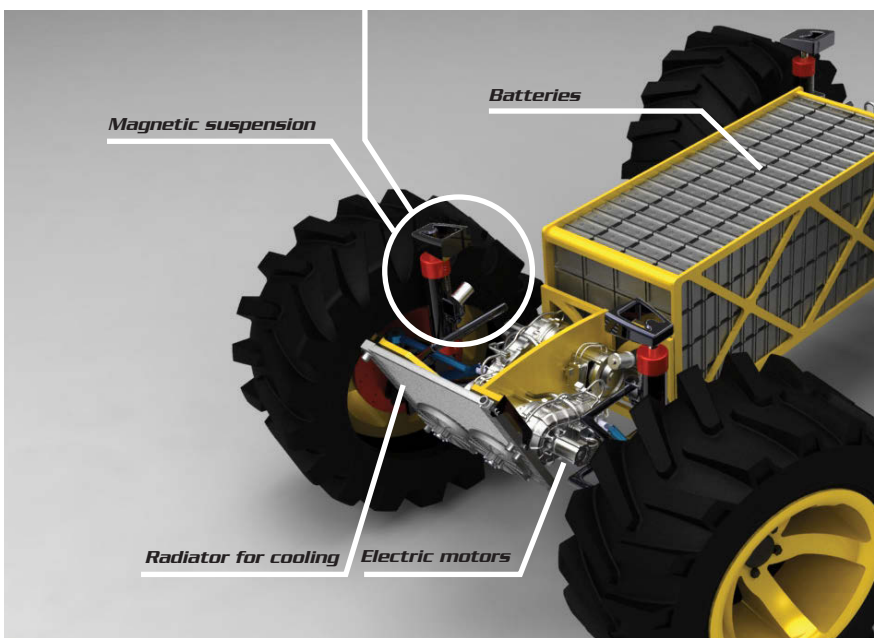

Designed as a multipurpose machine for agricultural applications, my electric tractor (E-Trac) uses electromagnetic suspension (EMS) to provide greater ride stability. By largely obviating friction, magnetic levitation technology can also reduce energy consumption, avoid wear and offer very low maintenance requirements.

Continuously adjusting the strength of a magnetic field produced by electromagnets using a feedback loop enables magnetic levitation to be used to provide a viable form of suspension. Levitation is usually provided by permanent magnets that have no power dissipation – electromagnets are only used to stabilise this effect.

When placed in a pure electrostatic field or magnetostatic field, a charged body cannot rest in stable equilibrium, so EMS achieves that by continually altering the current sent to the electromagnets to change the strength of the magnetic field. A feedback loop continuously adjusts one or more electromagnets to correct the object's motion, and thereby cancel the instability. Some EMS devices use a combination of magnetic attraction and magnetic repulsion to push upwards, while many others use magnetic attraction pulling upwards against gravity to provide some degree of inherent lateral stability.

The zero-emission E-Trac is an efficient and ecological solution – powered only by electricity, it uses four DC motors to transfer power to the wheels. The 320 battery cells are used to add weight and provide a long charge cycle.

The multifunctional cab is moved forwards, backwards and offers 360° rotation to enable optimisation for different machine variations such as front loader or backhoe loader. The E-Trac also has two three-point linkages; one each at the front and rear.

www.hisarlar.com.tr • ahmettogay@hisarlar.com.tr

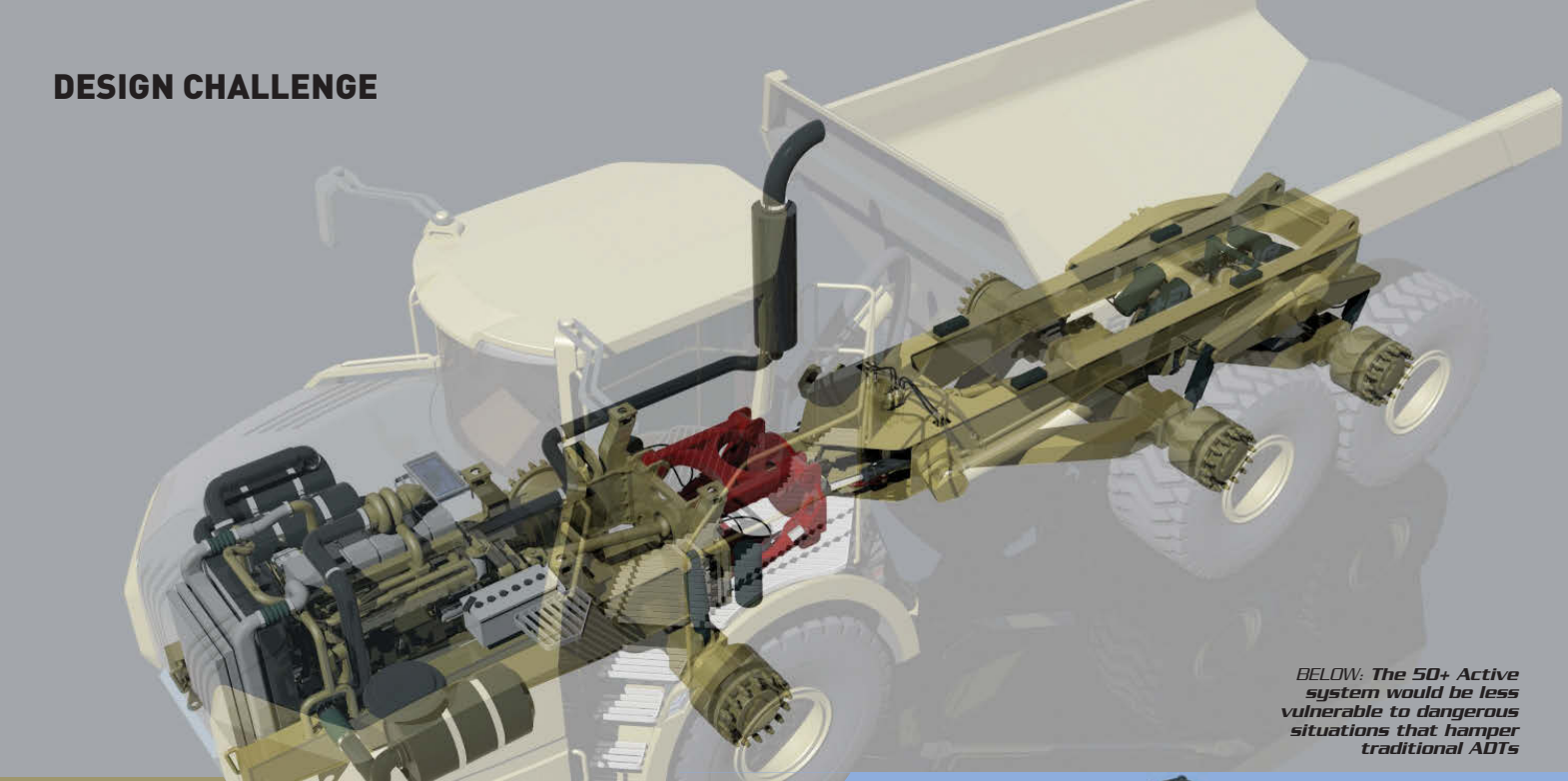

BELOW: **The 50+ Active system would be less vulnerable to dangerous situations that hamper traditional ADTs**

FLEXIBLE FRAME LINKAGE



Alberto Seco

Alberto has been involved in design projects from mobile phones to heavy equipment. After a spell at an Italian design consultancy and as an industrial designer, he now works in the auto sector

A common accident with ADTs consists of rolling over the bed while the front frame remains horizontal. Depending on the turning ring (rotating hitch) height/truck width ratio, the front frame can also roll over. The wider the ADT, the smaller this ratio, leading to greater risk of accidents. Dumping is another dangerous situation if the load descends suddenly, raising the front frame, which always ends with a rolled-over cab.

The design of the 50+Active ADT is based on a flexible link between the two frames, which would improve stability on soft or uneven terrain, while minimising rolling over of the front frame. This would also offer a solution to increase the height of the longitudinal rotating point when needed, while keeping gradeability of 50-tonne articulated haulers.

Unlike current ADTs, hydro-pneumatic suspension is extended to the frame. With a full suspension travel of 950mm, this flexible link has been designed to ensure maximum wheel contact on rough ground. It consists of two 'H' large cast upper and lower arms controlled by two suspension cylinders and hydraulic accumulators, which dampen energy from bumps to produce a smooth ride for maximum operator comfort. Position sensors in the frame would continually measure and accommodate for bumps in the surface, while lateral sensors would also measure any roll and constantly adjust cylinders to accommodate for this.

The +Active system also includes a three-point bogie beam design for the rear wheels. As the central flexible frame would directly influence the performance of the front frame, the front axle has been simplified while keeping independent suspension. The independence of frame sections and the long suspension travel on wheels would ensure good ground contact, superior off-road performance, improved vehicle stability and less strain on the frame, preventing accidents and minimising damage in the event of overturning. The system would also offer more power to the ground because the front tyres would keep ground contact pressure. As a result it would improve ride and minimise bouncing. This system would also maintain the hinge connection at a reasonable height in order to achieve the right gradeability of the machine.

www.behance.net/albertoseco • albsec@euskalnet.net







Building success needs the right partner.

It's your business to raise your customers to new heights. It's ours to efficiently support you in doing so. We've taken the profound know-how from our leading position in Commercial Vehicles and Passenger Cars to form a strong basis for innovative, individual and reliable electronics solutions in construction vehicles. We also explore new paths in product development, gathering user wishes online and implementing them. Visit our Innovation Platform and register under: www.continental-innovation.com
For your benefit, and your customers'.

Continental

PETER HILL, iVT INTERNATIONAL

WITH AN EMPHASIS ON OVERALL EFFICIENCY THROUGH THE SELECTION OF THE BEST POSSIBLE COMPONENTS, A RELATIVELY NEW ENTRANT TO THE TRACTOR MARKET IS CHALLENGING THE OLD-TIMERS



CREAM OF THE CROP

Should anyone have any doubts about how seriously Claas, the self-proclaimed harvesting specialist, takes its relatively recent involvement in the tractor market, they only have to take a walk around one of the latest high-horsepower Axions. These are tractors with an imposing presence, helped by styling that's purposeful but with a hint of aggression to emphasise the power waiting to be unleashed.

Stretch up to feel the top of the tall rear tyres; inspect the distinctively ribbed cast frame that cradles the engine; and check out the smooth integration of the muscular front linkage. Then climb the steps and settle into the suspended seat to peer at the stylish man-machine interface of the CEBIS electronics system, and rest a hand on the shapely CMotion control joystick.

Cocooned in this spacious, fully suspended cabin, where the noise and vibration isolation is effective enough to listen to an MP3 player without the volume turned right



up, the driver enjoys a commanding viewpoint – ideal for operating large-scale soil-working implements across the open arable plains of major wheat-growing areas in western and eastern Europe, and maybe in North America, too, when the time is right for Claas to make its tractor market debut there. The principal targets for sales are big farming enterprises, especially those already using Claas Lexion combine harvesters (and some smaller Claas tractors perhaps) along with a fleet of high-horsepower models from other major OEMs.

Facing down the competition

Ousting an established supplier calls for a highly competitive machine, so Claas has thrown the works in terms of technology and features at its new model, which offers four peak power outputs spanning 320hp to 410hp. The OEM has signalled its intent by entering the market with a 400hp+ model to lead the way on power.

This is a new market segment for Claas, and the Axion goes head-to-head with some highly competent tractors with proven credentials. On a global scale, John Deere leads the race with the 286-395hp 8R Series, along with Case IH and its 268-389hp Magnum Efficient Power line-up. In Europe, the 240-390hp Fendt 900 Vario range is a leading contender in this sector for the most powerful rigid-frame, standard layout tractors, with the 270-370hp Massey Ferguson 8600 Dyna-VT and New Holland 282-389hp T8 Series also attracting buyers.

The Axion 900's significance to Claas goes beyond taking the OEM into a new market sector, however. For one thing, it is the first all-new design to come out of the Le Mans-based Claas tractor division since a controlling interest was acquired from Renault in 2003, with full ownership following in 2008.

There have been many products launched since then, but, to some extent, the Axion 800, Arion, Axos and Elios are all evolutions of previous models using established transmissions – albeit injected with a hefty dose of Claas technology, styling and other elements of its DNA.

In contrast, the Axion 900 is an all-new design featuring a unique combination of components and assemblies brought together through an approach to product development that is new to Claas.

Making the most of what you have

Under the banner of CPS (Claas Power Systems), the new approach breaks down the barriers between different group divisions – primarily grain harvesting, forage harvesting, tractor and implements – to bring diverse expertise into a single group.

"A concept is built on a foundation of shared ideas, and that is why we formed our CPS team," says Bernd Kleffmann, corporate R&D. "CPS is about concerted efforts to optimise our product drive systems, involving experts from our various divisions.

"New approaches and projects rest on a foundation of shared expert knowledge within a company. We network our knowledge in order to



WHAT'S SO GOOD ABOUT THE ENGINE?

Now in its fifth year, the partnership between Claas and FPT Industrial continues to flourish within the CPS strategy (Claas Power System: best components for maximum efficiency).

The result of extensive collaboration between the two manufacturers, the six-cylinder, 8.7-litre Cursor 9 engine from FPT Industrial's range is one of the key elements of Claas's flagship Axion 900 tractors. The advanced selective catalytic reduction (SCR) aftertreatment system, already proven in over 350,000 units, ensures the engine meets Stage IIIB emission regulations, ensuring extremely low fluid (fuel and AdBlue) consumption. FPT's involvement with Claas engineers in continually improving its CPS strategy has led to excellent results – an Axion 950 measured at only 249g/kWh in the DLG PowerMix test is the best result ever in tractive cycles (conditions in which this tractor is most commonly used).

The Cursor 9 also delivers outstanding performance in terms of power (up to 302bkW/410bhp) and torque (up to 1,650Nm), with 98% of maximum torque already available at 1,100rpm, making the Axion 900 the most powerful conventional tractor in the world.

Through optimised combustion efficiency, the SCR-only solution operates without exhaust gas recirculation (EGR) or a diesel particulate filter (DPF), while the compact, fuel-efficient and reliable powerplant has service intervals of up to 600 hours.

Together with a specifically developed oil pan, the front end, cylinder head cover, flywheel housing and exhaust manifolds were revised from the base unit during further development in conjunction with the OEM.

In February 2013, the next step of the relationship between the two parties was announced, with the news that FPT Industrial will produce and supply a bespoke NEF 67 engine for the new Claas Axion 800. This will become the first agricultural tractor on the market with an engine that meets Stage IV requirements.



TOP: **The Claas Axion 900 is designed for high-productivity field work on large arable farms**

ABOVE: **The Axion needs first-class traction to exploit its peak output of 410hp and 1,650Nm torque**

generate new, practice-orientated solutions, so all our drive system experts contribute their knowledge, issues and expertise to a shared development process."

'Kraftintelligenz' is the core philosophy, which Claas defines as the very best components intelligently brought together across the entire machine, from drivetrain to working system, adds Henning Rabe, CPS market development. "This is what guides us," he says. "At Claas, power generation, power conversion and power exploitation share a common limelight, so our people are devoted to understanding the interplay of all of our drive technologies."

The CPS team's evaluation of available technologies has resulted in a novel combination of in-house and outsourced components and assemblies. Dana supplies the braked and suspended steering front axle, while GIMA – the transmissions design and manufacturing unit jointly owned by Claas and AGCO – produces the new rear axle assembly.

This heavy-duty, rigid unit is unique to the Axion, as AGCO's equivalent Massey Ferguson and Challenger models are underpinned by a Fendt transaxle incorporating the AGCO Variable Transmission.

Like these tractors, the Axion is exclusively CVT, but it uses the ZF Eccom 3.0 transmission. It's the first application for this newest addition to the Eccom family, and provides seamless speed control and different control strategies to optimise the performance of the tractor's engine, for which the CPS team chose FPT Industrial's 8.7-litre Cursor 9.

"The market is awash with options, especially when it comes to engines; but there is no such thing as a perfect off-the-shelf system," says Kleffmann, explaining this mix of componentry. "We are open to a wide range of solutions, and search for the most suitable components before putting each and every one to the test."

Pick and choose

The number of engine suppliers used by Claas provides evidence of this flexible approach. In addition to MTU (Mercedes-Benz) and Caterpillar, whose engines power the company's grain and forage harvesters, three more diesel brands power its tractors.

FPT Industrial already supplies 70-90bhp engines for the Elios utility and fruit/vineyard models built under contract by Carraro's Agritalia unit, while Perkins offers 75-102bhp four-cylinder units for the Axos machines. Caterpillar engines go into the big Xerion tractors at the top end of the range, but John Deere Power Systems makes the largest contribution, being the supplier of four- and six-cylinder engines between 100bhp and 268bhp across three Arion ranges and for the Axion 800 series.

For the Axion 900, Claas has been won over by FPT Industrial's large engine technology, already used by ARGO Tractors in its top-end Landini 7 Series and McCormick X70 tractors and by FPT's fellow Fiat Industrial businesses Case IH and New Holland.



The Cursor 9 uses SCR to meet European Stage IIIB/US Tier 4i emissions standards, with a Claas electronic engine management system interacting with FPT's ECU to provide optimum fuel economy with maximum power and torque generation, as well as an efficient partnership with the CVT.

Looking ahead, FPT has already revealed its 'SCR only' solution for Stage IV emissions (see *What's So Good About The Engine?*, left), by which it means no EGR will be used. Instead, patented technologies have been developed that cut NOx levels by more than 95% over the entire engine cycle, largely through notable improvements in the conversion efficiency of the catalyser. This has been achieved by evolution of the engine management system, says FPT, to control AdBlue dosing and the thermal properties of the post-treatment system to a higher degree of accuracy and precision.

Claas engineers have packaged the SCR system in a way that places all components under the hood, except the AdBlue reservoir, which is incorporated into the fuel tank and heated by engine coolant. "This not only avoids any visibility issues but also ensures these components are protected from accidental impacts – against gate posts, buildings and other potential hazards," points out Claas UK tractor product specialist Alastair McCallum. "In my view, putting these components under the hood has not meant compromising the tractor's balanced proportions and general appearance."

There is enough space beneath the hood for the air filter to be positioned above the power unit – helped by the engine sitting low in a substantial cast frame that forms part of the modular chassis and provides a side-mounted sump for the oil supply.

A strong foundation

The propeller shaft for the front axle passes through the casting, which has

WHAT'S SO GOOD ABOUT THE FRONT AXLE?

For the Claas Axion 900 tractor, Dana supplies the Spicer Model 770 axle in three configurations: a rigid-mounted option that offers basic driving and steering functionality and on-road travel speeds up to 40km/h; an advanced suspended axle that delivers improved vehicle stability, traction and operator comfort at up to 40km/h; and a premium suspended axle with integrated brakes that provides maximum performance and comfort with road speeds up to 50km/h.

By offering the Axion 900 with three axle configurations, Claas can deliver a full range of drivetrain options that help meet the varying price and performance expectations of customers.

First introduced at Agritechnica 2007, the Spicer Model 770 axle features an integrated steering system and suspension, with a hydraulically actuated multidisc differential providing 100% differential lock capability.

Dana offers a complete suspension system for the Claas Axion 900, including the hydraulic block and associated electronic controls for managing suspension behaviour. This suspension system includes a self-levelling feature in the hydraulic cylinder for managing the various load sizes that may be applied to the tractor during field operation. A lockout function for the suspension is also available for loader operation.

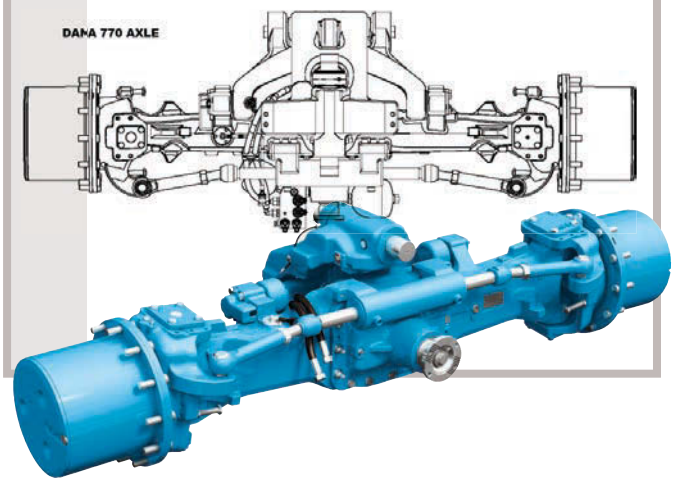



LEFT: **Packaging heavy-duty components and wide tyres within acceptable dimensions is a big challenge for tractor designers**







a bolt-on bottom plate for access. The axle bolster is shaped to allow the full 55° steering angle of the front axle to be exploited. A compact yet powerful three-point linkage assembly completes the front of the tractor, providing fold-up lower arms to carry implements or modular ballast blocks.

To the rear of the engine support frame is a two-section transmission casing that ZF says is strong enough to form part of the 'chassis' on tractors with GVW up to 18 tonnes. The rear axle and hydraulics set-up completes the driveline which, at 3.15m, offers a wheelbase at least 100mm longer than competitors – the exception being New Holland's T8 with its 3.45mm axle-to-axle spacing.

"This long wheelbase design is intended to help put the tractor's considerable power onto the ground along with rear tyres up to 2.15m in diameter and 1.7m at the front," says McCallum. "The tractor is built to run in single or dual wheel configurations, with flexible steel ballast options that can add over 1,700kg to the rear axle and 2,200kg to the front end."

Every step of the way

Using ZF's Eccom 3.0 stepless transmission – which Claas calls CMatic – provides installation and service continuity with the Eccom unit in the 180-268hp Axion 800 tractors. Its capacity to handle up to 420hp enables the Axion 900 to deliver maximum power for draft work, as well as for transport and PTO applications. Although that is also true of the Vario unit in Fendt's 900 series, the John Deere 8360R AutoPowr is limited to 360hp for draft work – its peak 395hp output is available only when powering a demanding PTO-driven implement or when travelling above 15km/h. Other AutoPowr and powershift models are similarly configured.

It's the same story with Case IH's Magnum 340 Efficient Power, which is restricted to 374hp for draft work, and also to a powershift transmission – until later this year, that is, when a CVX range with stepless drive and up to 419hp is due.

The efficiency and driving ease of a CVT with good control dynamics is making it the transmission format of choice for many professional farm businesses, especially in Europe, who recognise its productivity and fuel-saving potential. Like other CVTs in the Eccom range, the 3.0 version provides stepless speed control through mechanical and hydrostatic pathways, with a high proportion of mechanical drive in all situations.

The mechanical path comprises a planetary gear set and four speed ranges that are automatically selected under full load by hydraulic clutches. Speed variation within each range is provided by a variable-displacement pump and a fixed-displacement motor of series production.

The summarising transmission is integrated within the planetary gear set to blend the two power pathways in variable proportions under the management of an electronic control unit. This continuously determines the optimum speed range and the most favourable engine speed for the operating mode chosen by the driver. To make the most of the system, operators must still master a multitude of control options for driving on the road and operating in the field, with fuel economy, productivity, consistent ground speed or consistent PTO speed as the overriding priorities.

According to Jan-Hendrik Mohr, director of sales and services, bringing these major components together to create the Axion 900 highlights the emphasis Claas places on seeking overall efficiency, rather than just engine performance. "At present, our competitors are focused solely on one aspect, namely fuel savings based on highly specific tests," he suggests. "In contrast, we look at the system as a whole from the perspective of application in the field, to determine the working system that operates most effectively with available engine output. The engine is just one factor – efficiency in the field is key." **iVT**

MAIN IMAGE: **CMotion control joystick has been designed to support the operator's hand while making frequently used controls easily accessible to the fingers and thumb**

ABOVE: **Claas has brought together established systems in a unique combination through its Claas Power System strategy**

ON THE WEB

Links to several Axion animations:
www.iVTinternational.com

www.fptindustrial.com

NO WORK IS TOO HEAVY FOR FPT ENGINES.



FPT INDUSTRIAL ENGINES. DESIGNED TO GO BEYOND.

FPT Industrial takes every project as a challenge. This is why we put our passion and experience in developing engines that set the standard of excellence. Equipped with innovative HI-eSCR technology, our specifically designed construction engines match maximum power with low fuel consumption and reduced emissions, without Exhaust Gas Recirculation (EGR).

MARINE | ON ROAD | **OFF ROAD** | POWER GENERATION

FPT POWERTRAIN TECHNOLOGIES

POWERING THE FUTURE.

PETER HILL, iVT INTERNATIONAL

THINGS THAT GO BUMP IN THE SITE

OPERATORS CAN NOW SLEEP SOUNDLY AT NIGHT – THE ADDITION OF SUSPENSION TO AN INCREASING RANGE OF OFF-HIGHWAY MACHINERY IS NOT ONLY TRANSFORMING COMFORT LEVELS ON THE JOB SITE, BUT ALSO BOOSTING PRODUCTIVITY



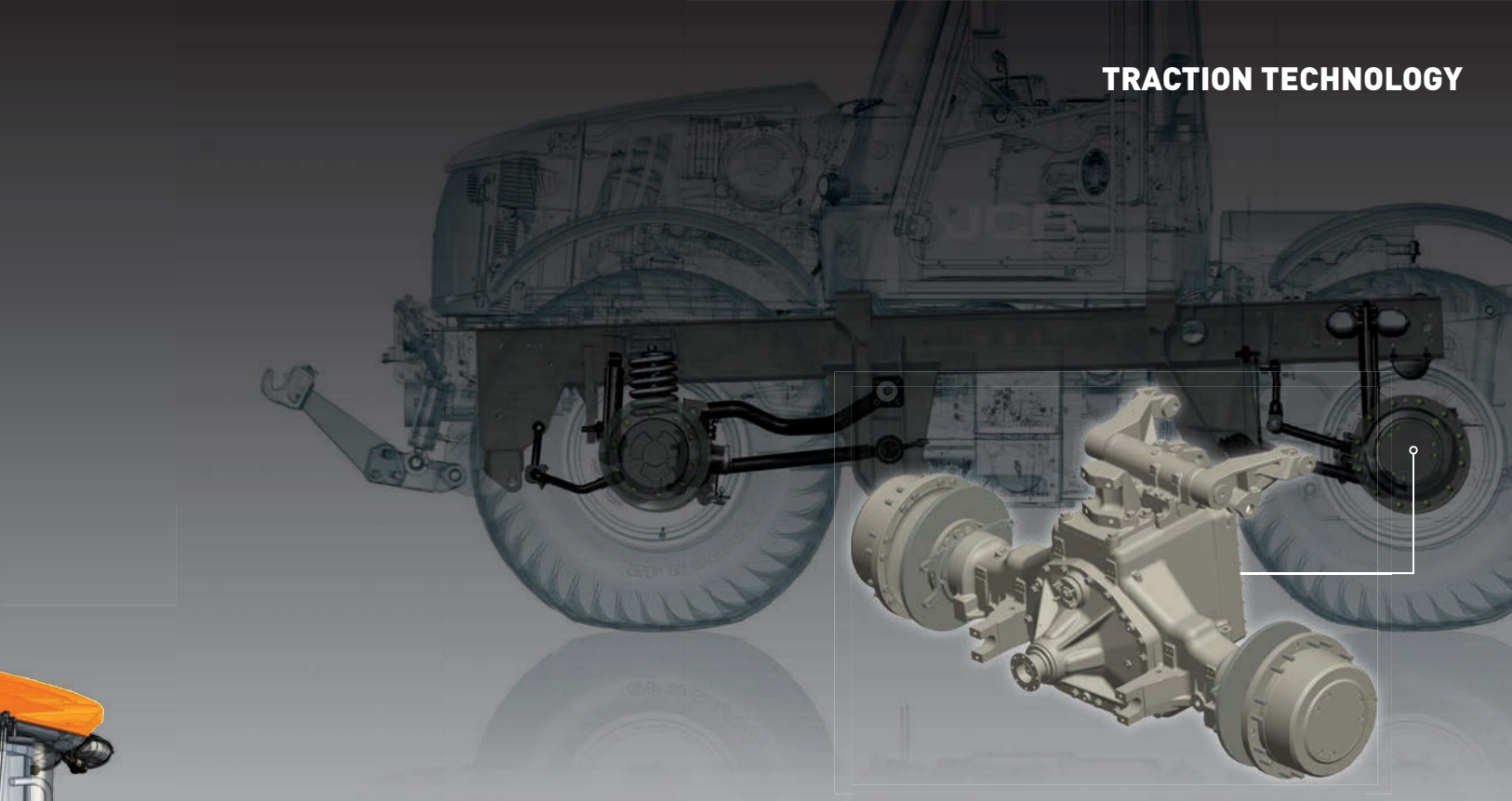



Taking a drive on a little grey Fergie or any other tractor with rigidly mounted axles provides a startling reminder of just how far agricultural OEMs in particular have come in providing operators with a healthier, more comfortable ride.

With stiff-walled crossply tyres, fixed axles and a hard seat with less than generous mechanical springing, the irregular surface of a country lane or stubble field – let alone one that has been ploughed – is all too obvious as the machine crashes over humps and hollows.

Today, things are very different. Providing a safe and comfortable environment for drivers of tractors and other self-propelled farm vehicles has become paramount. Promoting operator health and safety is a key driver; and so too is productivity to some extent – work speed is often dictated by whether the operator can remain in his seat more so than the capabilities of his machine.

But on advanced crop production farming units in the Western world especially, the part the operator plays in determining which tractors end up in the farm fleet means OEMs must strive to make their products as easy and comfortable to drive as possible in order to win their vote.

Advances in tyre technology and a willingness among large farmers to invest in bigger, more sophisticated tyres, have helped enormously – a more flexible carcass that is capable of carrying increasingly heavy tractors and implements at squashier inflation pressures is able to make a discernible difference to ride quality without any need for measuring devices to provide the evidence.

Improved springing of operator seats and cabins – to the extent that top models have active systems that not only account for different driver weights but also react to the type of terrain being driven across – are also playing their part.

Tackling the problem at source

But those systems simply deal with the symptoms; it is axle suspension that provides the front-line defence against a jarring ride and here, too, engineers are driving the technology forward with cleverer passive and increasingly sophisticated active systems. Early attempts to apply leaf springs, and later on coil-spring and damper combinations, to tractor front axles met with limited success. Like many successful developments on agricultural machinery, it is only since the availability of cost-effective hydraulics and electronic control systems that tractor axle suspension has become both viable and desirable.

One of the principal challenges for engineers is to ensure different suspension systems are working in



MAIN IMAGE: **JCB's Fastrac remains unique in having axle suspension at both front and rear**

TOP: **Rear axle assembly built for JCB by Oerlikon Graziano has active hydro-pneumatic suspension**

ABOVE: **Coil spring and damper suspension with an anti-roll bar on the Fastrac front axle**



WHERE ALL THE

SOLUTIONS COME TOGETHER

AND CONNECTIONS ARE MADE

IFPE 2014

Register now to get the ultimate up-close look at the future of the fluid power, power transmission and motion control industries.

Registration is now open for IFPE 2014 – the event that features all of the newest technology, product breakthroughs and leading-edge education. From components, systems, and controls, IFPE is your destination for finding all the solutions and design expertise you need to stay competitive and make your applications cleaner, greener and more efficient – all in one place.

Co-Located With

CONEXPO-CON/AGG 2014

MARCH 4-8, 2014 | LAS VEGAS, NEVADA, USA

Register now at www.ifpe.com to save over 30%!

Co-Owners

NATIONAL FLUID POWER ASSOCIATION NFPA

AEM

harmony – no easy task when you have tyres, front axle suspension, cab suspension and an air-suspended seat potentially working against each other to pitch the driver against the cab roof!

During road and farm track travel, the 'soft-ride' type of three-point implement linkage, where a gas accumulator provides a cushion, can also influence vehicle behaviour. In the field, comfort is the main reason for taking the front axle suspension option where OEMs offer a choice, not least due to the potential for a comfortable driver to get greater productivity through working his machine faster on a rough surface.

But there are other compelling reasons, too: the contribution that a well-suspended front axle can make to the tractive force generated by a 'front wheel assist' four-wheel drive tractor. A study of John Deere's first-generation Triple Link Suspension (TLS) at the Hungarian Institute of Agricultural Engineering concluded that it was equivalent to an extra 7.7kW (10hp) on the 110kW (150hp) model tested. It was equipped with 10 sensors to measure torque on the propshaft feeding the front axle; the speed of front and rear hubs and the torque on the rear hub; as well as the engine and forward speed, vertical acceleration of the chassis and front axle (on both sides), drawbar pull and fuel consumption.

A fixed front axle tends to bounce up and down slightly, resulting in changes in axle load and traction, which interrupts the power flow. At maximum pull force 'power hop' can occur – the tyres repeatedly gain and lose traction. An effective suspension system isolates the front axle from



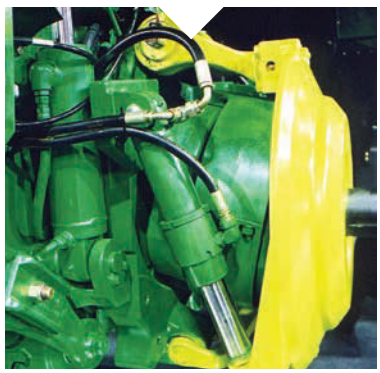

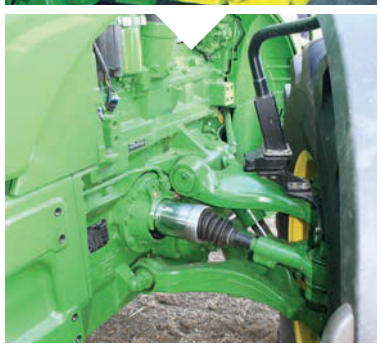

TOP LEFT: **Chains limit articulation of the beam axle with Tractor Link Suspension (TLS) on John Deere 6R and 7R tractors**
LEFT: **John Deere has toyed with tractor rear suspension but not introduced it into production as yet**
BELOW LEFT: **Independent Link Suspension (ILS) for John Deere 8R tractors**



BELOW: **Air suspension is Valtra's choice for the T Series but an air compressor adds cost**

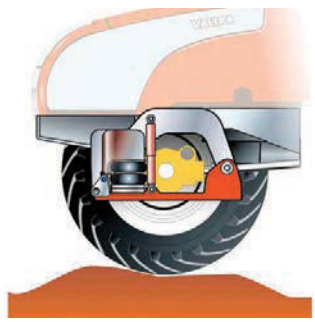

SPRAY TELL

Engineering an effective suspension system for a self-propelled sprayer is no less of a challenge than it is for a tractor, but the priorities are different. For a sprayer, the suspension must be sufficiently compliant to provide a comfortable ride for the operator in-field and on-road, and to minimise shocks to the wheels being transmitted to the folded boom structure during road travel.

Spray booms look most susceptible to damage when stretched out either side of the mounting frame, but they actually suffer more when folded down each side of the vehicle. Suspension performance must be retained in the field regardless of the changing weight of the vehicle as it empties its 2,000-5,000-litre tank of diluted pesticide or heavier liquid fertiliser.

Ride-height control therefore becomes a welcome feature for maintaining suspension travel and preventing a rocking motion caused by liquid surging in the tank. It must also provide sufficient vehicle stability when travelling at up to 40km/h or more on-road and at working speeds that may often reach 16km/h. That is not just to maintain accurate steering over undulating ground, but also to enable the spray system's suspension to keep booms up to 52m wide as parallel to the ground as possible.

Airbag suspension with mechanical or electronic ride-height sensing is a popular choice among OEMs, for beam axles for a mechanical drive as well as drop axles housing a hydraulic wheel hub motor. But packaging constraints can be an issue: sprayers working in mature cereal and oilseed rape crops or tall row crops need to present the clearest, most open underside possible to prevent plant damage.





AIRBAG SUSPENSION WITH MECHANICAL OR ELECTRONIC RIDE-HEIGHT SENSING IS A POPULAR CHOICE AMONG OEMS

This is tackled on Hardi-Evrard's sprayers by positioning the suspension system on top of – rather than beneath – the chassis. Crank arms transfer the front axle movement to a pair of large-diameter steel-coil springs positioned horizontally in the nose of the vehicle either side of the engine.

The compact hydraulic cylinder suspension on Challenger's RoGator 600 Series vehicle provides ride-height adjustment as well as cushioning suspension. For road travel and pre- or post-emergence crop protection, the lowest ride-height setting is used for maximum stability. As the crops grow, the body of the vehicle can be raised by up to 450mm.

Agrifac takes this principle to the extreme on the ClearancePlus version of its Condor sprayer, using a specially designed drop-leg axle arrangement to provide up to 2m of ground clearance – enough to apply late fungicides to maturing maize crops without damage. The Condor is also notable for its unusual StabiloPlus chassis design, which mounts the front and rear hydraulic motor wheel hubs on a rocking beam on each side. Upright rods connect the ends of each beam to air suspension 'springs'.

The weight-transfer effect of this 'walking beam' arrangement irons out chassis movement reaction to the wheels dropping into dips and riding over bumps, so the sprayer's wide-working boom can be kept on as even a keel as possible.

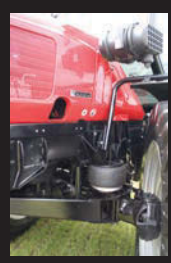



CLOCKWISE FROM TOP LEFT: **AGCO Challenger RoGator, Agrifac Condor StabiloPlus, Hardi Evrard Alpha VariTrack, and Multidrive air suspension**

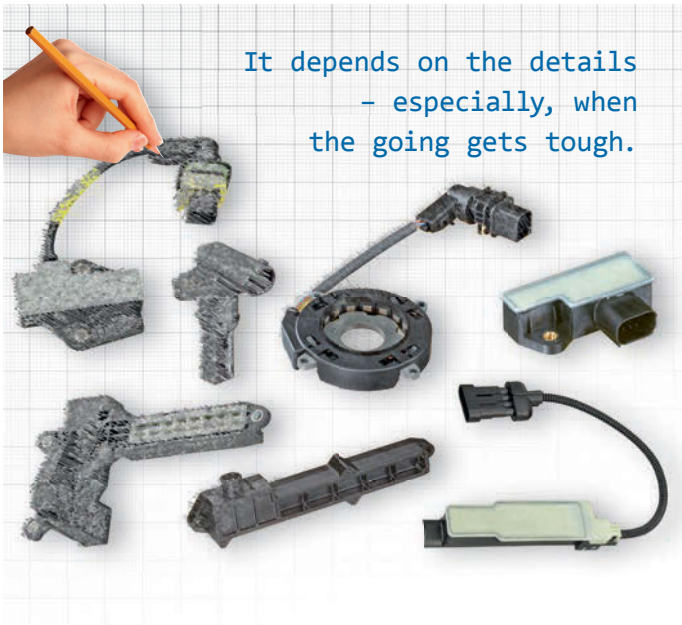



INNOVATIVE SENSOR SOLUTIONS

TE Automotive – a division of TE Connectivity – is a leading global source of non-contact automotive and commercial vehicle sensor solutions. TE Connectivity supports customers in selecting the appropriate sensor technology, optimizing and designing the magnetic and electrical circuit and finding the most suitable mechanical design with an optimized electrical interconnection system.

In addition to individual stand-alone sensors, TE Connectivity has wide experience in sensor-integrated modules that offer different sensor functions into one package. Typical module applications for these modules include automated- and automated manual transmissions.

TE Connectivity sensor solutions are proven in dual-clutch and other transmission systems, regenerative and electro-hydraulic braking systems, stop/start systems, clutch position detection, rear-axle steering and many more applications.

Tyco Electronics AMP GmbH
a TE Connectivity Ltd. company
AMPèrestrasse 12–14
64625 Bensheim
Phone +49 (0)6251 133-1999
Fax +49 (0)6251 133-1988

TE connectivity
INDUSTRIAL & COMMERCIAL TRANSPORTATION

www.te.com | www.te.com/automotive

TE Connectivity and TE connectivity (logo) are trademarks.

TE's only obligations are those stated in TE's General Terms and Conditions of Business (www.te.com/aboutus/tandc.asp). TE expressly disclaims any implied warranty regarding the information contained herein, including, but not limited to, the implied warranties of merchantability or fitness for a particular purpose.

From 0 to 50 mph in 25 seconds – from 50 to 0 mph in 5 seconds ...



... KNOTT brakes.

The Austrian airport fire engine pictured is powered by two engines rated at 440 kW each, weighs 49 tonnes and has a top speed of over 80 mph. KNOTT brakes ensure that this high-speed vehicle is braked precisely and safely.

Requiring little maintenance, exceptionally long lasting and easy to service, our brakes represent KNOTT quality down to the very last detail. When, in addition, flexibility, performance and reliable deliveries are called for, we are in our element. Well known manufacturers at home and abroad value us as dependable suppliers. We would welcome an opportunity to count you among them. We are there for you.

Phone: +49 80 56/906-0

We make your brake

KNOTT BRAKE TECHNOLOGY

www.knott.de

www.skpwerbung.de





ABOVE: **The Dana Spicer 700 series axle with integrated suspension is popular with tractor OEMs, including Claas**

the tractor's movements to some extent, resulting in more consistent loading and traction, and increased potential tractive force.

In the Hungarian institute trial, when running at 7.5km/h on dry stubble, when the suspension was activated drawbar pull increased by 7% at 5% wheel slip; almost 8% from 10-15% slip; and 8.5% at 20% slip. An improvement of more than 9% was recorded at 25% slip rate, the 3.7kN increase in drawbar pull being rather like releasing an extra 7.7kW (10hp) from the 110kW (150hp) six-cylinder engine, which would likely command a higher purchase price.

Deere's TLS comes in slightly different forms depending upon whether it is installed on European-built or the more powerful US-built tractors, but the two variations are similar in principle. The tractor frame is supported on the beam axle by two double-acting hydraulic cylinders attached to gas accumulator 'springs', with a Panhard rod limiting lateral movement. Regular axle articulation is available, constrained by a pair of three-link chains attached to the cradle mount.

The cylinders act independently or at the same time to dampen shock loads, and spring rate can be varied from within the cab to suit different operations – from soft when running light, to stiff when working with a loader. An electronic sensor signals a priority valve to automatically move the cylinders as necessary to ensure a consistent ride height is maintained, while allowing +/-50mm of vertical movement. Synchronisation with the three-point linkage sensing system compensates for the power-hop effect under heavy draft loads.

Gravity check

A TLS feature shared only with the in-house Terraglide front axle suspension available on New Holland T6 and T7 tractors is a conical cast driveline member bolted to the rear face of the axle and running back to the centre of the tractor frame. On both designs, this controls the fore-aft movement of the axle while also transferring longitudinal forces to the tractor's centre of gravity. On the T6 and T7, there is 60mm of upwards movement and 45mm down from the regular ride height.

Larger New Holland T8 tractors employ the compact Dana Spicer 700 series integrated suspension planetary drive axle. This is available in eight sizes for tractors from 120hp to 340hp, and is an increasingly popular choice among OEMs: it is also used by AGCO on a number of Massey Ferguson and equivalent Challenger four- and six-cylinder tractors, and by Claas for the high-horsepower Axion 800 and 900.

The assembly is attached to the underside of the front bolster by a trunnion that allows the full-width axle plenty of oscillation movement over a rough surface. Short upper and lower parallel trailing links provide +/-45mm of vertical movement controlled by a single cylinder, while resisting rotational torque generated by the wheels.

The axle is available with three hub diameters and a choice of track widths, with a multidisc differential and also disc brakes in most cases.

In operator observation and test measurements carried out by *Profi International*, the Spicer 700 series axle installed on a 140kW (190hp) MF 7400 Dyna-VT tractor scored slightly above the group average of several tractor front axle suspension systems. Axle response was stiff when travelling solo, though became fluid

NEW HOLLAND T8 TRACTORS EMPLOY THE COMPACT DANA SPICER 700 SERIES INTEGRATED SUSPENSION PLANETARY DRIVE AXLE





NAF
Driven by Innovation

Highest Reliability for Construction Machinery

NAF, the world market leader for drive line solutions used in ctl forest vehicles, offers a range of bogie axles for construction machinery with:

- Application-specific designs
- Cast construction
- Speed capability of up to 65 km/h
- Patented oil immersed self-cooling disc brake
- Patented Balance Bogie System PBBS®
- Gear drive for high durability and long working life

Our customized design keeps you ahead of the market!

Made in Germany since 1960

www.nafaxles.com



WE PRESENT OUR NEW APP – SittApp

Save Your seat settings in Your Iphone or Android phone.

If Your cab have the "Sittab Inside" symbol – Your seat will adjust itself to Your saved settings while you enter the machine.

Settings are saved in Your phone and picked up by Bluetooth.

SITTAB inside



There is a better way

SITTAB

SITTAB Stol AB • +46 (0)243-24 42 50 • www.sittab.se



TAKING THE ROUGH WITH THE SMOOTH

Volvo CE's Full Suspension system for its articulated haulers has greatly increased productivity and comfort. Instead of standard bogie beams, rubber springs and shock absorbers, the fully hydraulic system uses six hydraulic cylinders – one for each wheel – to connect the truck's frame and wheel axles. The cylinders move independently of each other, increasing stability on rough haul roads. The cylinders are connected to accumulators – the 'spring' part of the system that generates the suspension action. This increases operator comfort, allowing the hauler to be safely driven faster for greater productivity.

SIX LEVEL SENSORS MONITOR THE FRAME IN RELATION TO THE AXLES AND SIGNAL THE HYDRAULIC SYSTEM TO ADJUST THE SUSPENSION

Volvo studies have proved that, during the empty part of the haul cycle, a Full Suspension hauler can be operated at more than double the speed of a standard hauler while still maintaining the same level of comfort. The productivity advantages of the system are so great that, by switching to Full Suspension haulers, customers can reduce the number of machines and operators in their fleet while maintaining the same production rate. By reducing their fleet size, machine owners are able to lower operating costs, making FS haulers a more economical choice over the life of the machine.

FS haulers deliver a smooth and steady performance, whether with or without a load. This is achieved through two low-pressure and two high-pressure accumulators that are connected to cylinders on the trailer unit. When the truck is empty, the low-pressure accumulators provide suspension; when it is loaded, the low-pressure accumulators bottom out and suspension is provided by the high-pressure accumulators. On both the trailer and the tractor unit, the cylinders' plus sides on one side are connected to the minus sides on the other. This arrangement provides the machine with exceptional stability.

Another aspect of the system is the automatic levelling function. Six level sensors – two on each A-frame – monitor the frame in relation to the axles and signal the hydraulic system to adjust the suspension. This optimises stability and keeps the articulated hauler level regardless of the load.

Because the Full Suspension system adapts to rough haul roads, operators do not feel the effects of the ground conditions as readily, which reduces the need for road maintenance. This means that the machine can haul both longer and faster before road maintenance is needed – increasing productivity while reducing operating costs.

Full Suspension brings benefits to all the applications in which articulated haulers are used – especially during long haul cycles over hard, rough terrain. The Full Suspension system is available on Volvo CE's A35 and A40 models.

Mats Karlsson is director of the hauler platform at Volvo CE

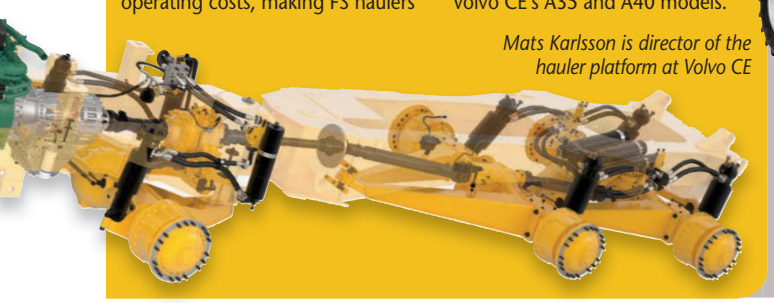

when the tractor was ballasted and paired with an implement; similar observations were made about the same axle design installed on a 135kW (183hp) Claas Axion 820.

In the same test, ZF's front suspension, as used by SDF for its mid-range Deutz-Fahr and Same tractors, received mixed reviews. This installation comprises two short link arms, each with its own hydro-pneumatic cylinder, which cradle the beam axle. Like other suspensions, it can be switched off from the cab when operating with certain front-mounted implements. There is no spring rate adjustment, but the design does automatically stiffen during braking to limit pitch.

While the ZF installation impressed when travelling light, operators were not so keen on the way the long-travel design produced a lot of fore and aft movement in the test, resulting in both the cab and seat hitting their stops on the roughest parts of the track when pulling a heavy trailer at speed.

Semi-active support

A semi-active installation on a 145kW (197hp) Case IH Puma 195 CVX performed well in the test. This design has a single double-acting ram mounted vertically between the front tombstone and a link pivot around the beam axle. In conjunction with an accelerometer, an ECU and a gas accumulator, the cylinder's damping effect is adjustable in three steps and the system responds quickly to any counter-movement caused by acceleration and braking.

However, despite appearing to be one of the simplest designs, its four grease points, compared with half that number on the Spicer unit and none on the ZF arrangement, mean it requires a little more routine service attention.

That has created some operator resistance to the Carraro 20 Series integrated suspension axle, which has a central beam with double wishbones at either end providing controlled wheel movement.

Although this did not feature in the *Profi International* test, operators are generally positive about the suppleness and control of the design, which can be installed in place of a rigid axle without any modification to the chassis or transmission shaft.

It also provides as much wheel movement as most systems at +/- 45mm, has adjustable spring rate, ride height control and manual over-ride to help in attaching front-mounted implements, as well as lock-out. Five sizes are available, catering for tractors from 74-151kW (100-205hp), with a choice of limited-slip or wet clutch locking differential, and wet disc brakes.

Dana also features a wishbone suspension axle in its tractor range – the Spicer 970, which was developed with AGCO's Fendt unit for tractors from 180-270kW (240-360hp). It is designed to be an integral part of the vehicle frame as opposed to an add-on axle, for reduced complexity and ease of assembly. The locking differential housing incorporates mounts for a three-point implement linkage and front-end PTO.

Air-operated disc brakes are also built into the central assembly, with additional discs installed for the 60km/h-spec version used by Fendt. Joints and bearings are maintenance-free – there are no grease points.



ABOVE: **Carraro 20 Series wishbone suspension axle is installed on Argo's Landini and McCormick tractors**





ABOVE: **Integrated front axle and suspension from Dana for Fendt tractors**

BELOW: **Things get complicated with tracks – front axle suspension for John Deere 8RT tractors allows the tracks to oscillate**

At 300mm, the design also offers more wheel travel than any other, with the ride height adjustable to help in hitching front implements. Above 20km/h, differential springing across the axle is locked out by the Fendt Stability Control system to provide greater stability and more secure steering control in curves.

What about rear suspension?

John Deere's own Independent Link Suspension is another integrated design in which the front axle forms part of the tractor's frame. Installed on the company's high-horsepower 8R Series tractors up to 290kW (395hp), each suspension assembly comprises cast upper and lower control arms with cast steering knuckles, an inclined hydraulic cylinder coupled to a gas accumulator, and an electronic control system.

The upper arms are shorter than the lower ones to maintain the wheels perpendicular to the surface – very important when running dual wheels – and this arrangement also confers anti-dive characteristics under braking.

Deere engineers have also looked into the feasibility of installing a similar independent arrangement for the rear axle and gauged reaction at both trade shows and field events.

Each rear wheel is attached by upper and lower support arms and two hydraulic cylinders (at the front and back), providing 130mm of independent wheel movement.

The design has yet to see the commercial light of day, which leaves the JCB Fastrac as still the only agricultural tractor with suspension at both ends. The original concept of a medium-horsepower tractor used primarily for farm transport has been expanded to encompass the high-horsepower 8000 Series field machines up to 230kW (310hp) for heavy draft work – while still being able to turn in a 65km/h top speed on the road.

Both axles suspended beneath the Z-section monocoque chassis were developed in partnership with, and are manufactured by, Oerlikon's Graziano Trasmissioni. They are located by four links each with the addition of an A-frame at the rear, but while the front axle relies on coil spring and damper assemblies, plus an anti-roll bar, the rear end is a self-levelling hydro-pneumatic system. This set-up not only provides exceptional ride quality for road and field work, it also enhances the tractive performance by helping to keep all four wheels firmly planted on the ground. **iVT**

ON THE WEB

Loads of JCB Fastrac and Agrifac Condor StabiloPlus suspension videos and animations via: **www.iVTinternational.com**



Engine off. Savings on. Interest high.

Our ground-breaking Engine-off technology, that helps maximize the cost-efficiency of your heavy-duty equipment, generated a lot of attention at the Bauma 2013. A big thank you to everyone for your interest as well as the visit at the show!

Learn more about our innovative technology that maintains optimized temperatures for man and machine all year long and how our customizable Engine-off heating and cooling solutions can benefit you personally. Cutting-edge heating and cooling solutions from a single source. That's Feel the Drive. **www.webasto.com/engine-off-climate**

Webasto
Feel the Drive

HAMON STEWART, iVT INTERNATIONAL

DAMAGE LIMITATION

AIR CUSHION TECHNOLOGY COULD PROVIDE A SOLUTION TO AVOIDING THE DAMAGE CAUSED BY INDUSTRIAL VEHICLES TO SOIL AND TURF. SO WHY ISN'T ANYONE DOING ANYTHING ABOUT IT?



Vehicle ground pressure can be dramatically reduced if the weight is spread right over its entire ground occupancy area instead of just the small contact area of four tyres – for the average car, this is generally equivalent to about the size of an A4 sheet of paper.

However, one technology that has been well established and proven over many years is very beneficial and economical where used in the right contexts, providing access over difficult terrain such as sand, mud, marsh, snow and ice. Air cushion technology can enable amphibious hovercraft with buoyancy tanks to also travel over water of any depth, including rapids.

Additionally, heavy loads can be moved more easily, due to very low friction with the ground surface, and with precision. The required power is correspondingly low for propulsion, but relatively high for maintaining the air cushion.

So how does the technology work – and could it be an option for those industrial vehicles that regularly face struggles in soft terrain, or those that must avoid damage to soil and turf?

Blow-by-blow description

Air propelled underneath an object rebounds off the supporting surface, giving the object lift proportional to the supporting area. Air cushion vehicles (ACVs) use flexible rubber skirts to retain the air and greatly increase the 'hover height' to enable travel over obstacles, while the air cushion provides suspension.

Air escapes under the skirt edges, however, and needs to be continually replenished, so the air gap below the skirt must be kept as small as possible to keep power requirements to a minimum. Research and experience with various skirt designs has led to the bag-and-finger design now being the most commonly used, where a continuous section mounted to the

BELOW: **Air cushion vehicles could greatly reduce the impact of off-highway machinery on delicate terrain** *(Image courtesy of Neoterich)*

"THERE IS A DEVELOPING MARKET FOR AIR-CUSHION VEHICLE APPLICATIONS IN AGRICULTURE. ABOUT 7% OF ARABLE LAND IS EFFECTIVELY UNUSABLE BECAUSE OF COMPACTION"

Roger Lane-Nott, director general of the Agricultural Engineers Association



hull feeds air into a series of segments or 'fingers' below it. The bag gives greater hover height on larger craft than segments alone can provide, but smaller craft tend to just use segments for simplicity and cost.

The fingers of the skirt deflect around or over objects to maintain the seal with neighbouring fingers and minimise loss of air from the cushion, but at the expense of added skirt wear and possible damage. If a segment is damaged or missing, those on either side will expand to fill the free space. In the event of a sudden system failure, the air will escape from the cushion relatively slowly, lowering the craft gently.

Skirt materials used on modern commercial and industrial ACVs tend to be a nylon weave coated with rubber. Additional spray-suppression skirts help to maintain visibility and minimise craft icing in winter, and can also help to reduce dust on land. Hard surfaces such as asphalt, concrete and sharp rocks and stones cause rapid skirt wear.

Ice is also abrasive for skirts, and can be very sharp. "While skirt wear is just part of normal operations, it is crucial to find the right balance when it comes to skirt material (cost, durability and physical properties)," says John Maczko, chief pilot and director of operations of the Hungary-based Armadillo Hovercraft Rescue & Response Support Unit. "Heavier material has an impact on hover height and manoeuvrability, but the skirt wear is much better, reducing operating costs."

Don't rock the boat

Craft width should generally be between half and two-thirds the length to ensure stability. Air cushion vehicles have a self-righting moment which is produced when the centre of pressure in the cushion shifts, with specifics characterised by the particular design.

Power-to-weight ratios for ACVs are quite high compared with other vehicles, although specific lift power has decreased since the early days by a factor of 5 (from 73kW/t on the first fully functioning hovercraft, SR.N1, to 15-20kW/t on modern craft).

Some ACVs use one power source for both lift and propulsion, although the advantages in overall cost, fuel efficiency and construction do come at the expense of manoeuvrability: with an independent lift system and constant cushion pressure, slow-speed manoeuvring is much easier and static hovering also becomes possible.

The choice of power source is usually between gas turbines or diesel engines, depending on craft size and payload. The latter are considerably cheaper to install and fuel than gas turbines, while finding reliable spares and servicing support for turbines – and also suitably clean fuel for them – in many countries will usually be harder than for the considerably more widespread diesel technology. Improvements in power ratings of diesel engines with suitable power-to-weight ratios are said to have pushed the point where gas turbines become necessary to a general region of almost 6,000kW.

Air cushion pressure is generally less than 1psi – the actual pressure depending on the application. This compares very favourably with the typical adult human footprint of 7-8psi. Lift air tends to be provided by centrifugal fans as high flow rates are required, but at low pressures. Brian Russell, editor of the *Hovercraft Bulletin*, notes that "the SR.N5 and SR.N6 hovercraft had a 10-tonne unladen weight and cushion pressure of 15lb/ft² [0.1psi]… there was an analogy that this is equivalent to a seagull standing on one leg".

Usually, a vehicle's traction is derived from pressure under the propulsor (e.g. tyres) surface. ACVs without any ground propulsion use large fans for air propulsion – but slopes can be a problem without ground traction or guidance.

RIGHT & BELOW RIGHT: **Hoverbarges provide large heavy-lift capability over soft or sensitive ground** *(Image courtesy of Hovertrans Solutions)*



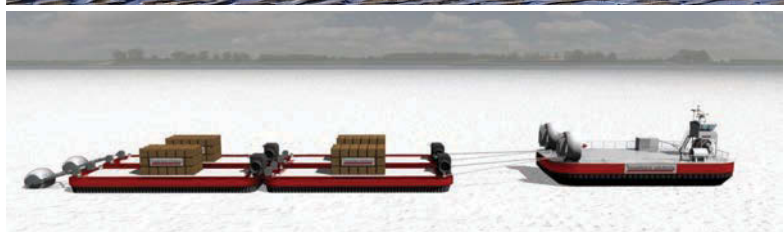

m = 2kg
***g* = 9.81kg/s²**
m*g* = (2x9.81) = 19.6N

F = lifting force and must be greater than m*g*, say 20N



ABOVE: **Based on this principle, very large loads can be lifted using only a moderate lifting force, provided the load and lifting force are distributed over as many points as possible**

RIGHT: **The Hoverbarge operates on the principle of using air pressure to lift large loads. Although only low-pressure air is used, it is required in very high volumes**

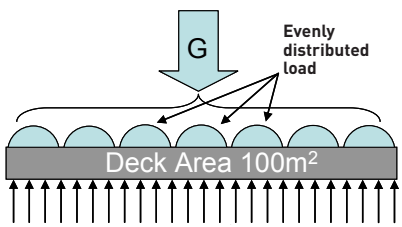

Air pressure lifting force

1psi or 700kg/m2

Load = 70,000kg or 70 tonnes



So, what about off-highway?
Search and rescue application areas include mudflats, shallow water and ice, and water of varying or unknown depth, or with unknown submerged objects. ACVs are even used in some airports for crash rescue on difficult terrain. They are also generally immune to mines triggered by ground pressure.

Although several hybrid versions have been attempted over the years, it would be extremely difficult to produce an ACV with wheels or tracks that provides effective performance in each vehicle mode – in fact, some say it's impossible. A hybrid vehicle featuring either wheeled or tracked propulsion as well as ACV capability would need to combine two very different sets of requirements. The vehicle would almost certainly be fundamentally one type, with only a basic capability of the other – and strength requirements dictate that it would have to be more road vehicle than hovercraft.

While previous attempts at ACV road vehicles have met with limited success, they were mostly developed a considerable time ago. Therefore, modern technologies and methods, combined with composite materials and a radical shift in approach, may just possibly render a functioning result – although it might well be prohibitively expensive.



LEFT: **Originally designed by Neoterich as a gimmick for US Masters champion Bubba Watson, the subsequent interest has resulted in plans to produce up to 140 hover golf carts this year**

STILL A FAIRWAY TO GO?

As luck would have it, Wacker Neuson was displaying an air-cushion vehicle concept on its booth at Bauma this April. The HC300 compact excavator is the result of a design study in co-operation with students from Austria, with the goal of developing futuristic construction machines that facilitate, simplify or make earthmoving more efficient. New application fields were also wanted. There was only one essential prerequisite: compactness.

Gerald Krenn, product designer at Wacker Neuson, describes the unusual concept: "The HC300 is a compact excavator based on hovercraft technology [that can] slide along the ground almost without contact. It is especially designed for ground-sensitive applications such as golf courses and parks."

The total weight of the machine is expected to be below 300kg, to take full advantage of the hovercraft concept. Materials would therefore be of low weight, and could include super-lightweight fibre composites or carbon fibres.

And with weight being the crucial factor on sensitive surfaces, remote control operation helps to reduce the weight even further, given that a cab plus the weight of the user would increase the total weight by more than 100%. In addition to the lower weight, other advantages over the traditional compact excavator include enhanced soil protection, maximum manoeuvrability, usability on swampy ground and reduced complexity.

Nevertheless, Krenn is nothing if not realistic when asked how likely the HC300 would be to hit the market: "The resulting projects are important sources of inspiration for the future but they will not enter production any time soon," he says.




JCB
COOL
TO THE
CORE
A clean radiator saves fuel
while increasing performance.
Flexxaire's TACfan technology provides
optimized engine cooling allowing your
machine to work harder, save money...
and keep your radiator clean.
flexxaire.com
FLEXXAIRE
Robust Intelligence | Engine Cooling Systems


With Nimcos Variable
Displacement Pump,
Proportional Joystick
Unit and the CV 2000
Post Compensated
Load Sensing Valve,
your machine will be
easier to program
and monitor for
optimal performance
regarding control
and safety, as well
as fuel consumption
and carbon foot
print. With Nimco
your machine will
give more with less
input.
WE LIFT YOU HIGHER
nimco
hydraulic systems
Agnesfridsvägen 186, 200 39 Malmö, Sweden +46 (0) 40 22 76 00 saleseurope@nimco.se www.nimco.se

Brian Russell comments, "Trying to produce a multi-terrain vehicle with an air cushion as well as wheels or tracks faces the fundamental problem of a very severe weight penalty of the wheels or track system… there are very niche applications for air-cushioned vehicles with ground traction, but they are the exception rather than the rule."

Nevertheless, large hovering transport platforms, either with or without self-propulsion, have been in use for many years. The D-PAAC and Salamander are said not to have progressed beyond the test stage in the 1970s or 1980s, and it seems that details are no longer available beyond photographs. Hoverbarges, however, are a very niche but highly effective application that can generally avoid the need for temporary roadways – clearly an advantage environmentally and for savings in time and overall cost. Hoverbarges are deliberately low-tech for simpler maintenance, and have flat upper sides for physically large loads. The load to move a 200-tonne payload ACV barge at about 9km/h is said to be 5 tonnes.

Hoverbarges have a standard 1.8m hover height and cushion of 1psi or less. Payload capacities range from 50-2,500 tonnes, with a 90-tonne payload model measuring 34x17m, and a 2,500-tonne hoverbarge 177x75m. The system is modular and can be assembled on site.

Dan Turner, chief technology officer at Hovertrans Solutions, points out, "Open areas where there is no infrastructure are where large air cushion platforms come into play and are very competitive. We put some chicken eggs on the ground and then went over them with a hoverbarge at 650-tonne all-up weight and a cushion of 1psi – and the eggs emerged absolutely fine due to the low pressure."

For some applications, Hovertrans adds wear pads riveted to the front of each segment with chainmail on the leading edge, which the company

BELOW: **This air-cushion heavy transporter, used mainly in the 1960s and 1970s in the UK for moving transformers over bridges, had to cope with a lot of skirt wear – although this was counteracted to a certain extent with modifications. However, hard surfaces remain a major wear issue for ACV skirts** *(Images courtesy of The Hovercraft Museum)*

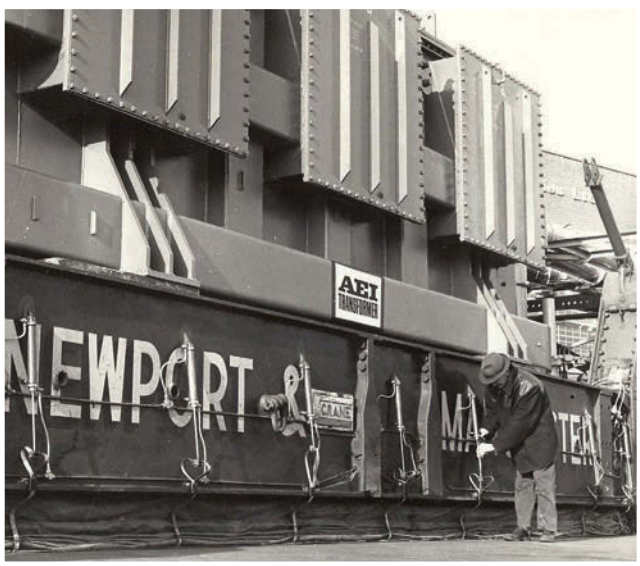

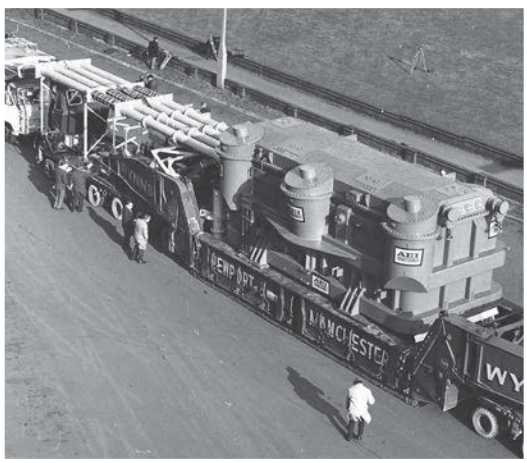

WHATEVER HAPPENED TO…?

In the 1980s, Bell Aerospace Textron thoroughly researched a conceptual hybrid wheeled air cushion crash rescue vehicle (ACCRV) that was equipped with a retractable air cushion system, and tested a scale model. It determined a pair of paddle-tracks for skid-steer propulsion driven from a rear axle take-off as being the most suitable drive mechanism for the constraints in ACV mode.

It featured 65mph roadway speed and 60% gradient capability but, being based on a conventional hard-roadway wheeled vehicle, it provided only weak air cushion performance, with a 10-15mph maximum speed depending on conditions.

A maximum 30% of the vehicle weight was supported by the tracks and wheels for tractive effort and directional control, as a balance is needed on soft ground between sufficient contact area for traction and sinking to a point where the vehicle will get stuck.

Standard aluminium honeycomb sandwich panel was used for the hull, being very strong and lightweight – but also costly and probably difficult and expensive to repair. The single 736bhp turbocharged water-cooled Detroit 8V92TA diesel engine was to supply all power requirements via a distribution system capable of handling varying power levels and speeds, and included automatic Allison HT750 DR transmission with TC 499 torque converter. The lift fans and propulsion would be driven via a gearbox and centrifugal clutch, allowing the fans to freewheel if the engine speed suddenly dropped.

The vehicle would have had a 9-ton unladen or 14-ton all-up weight, being distributed on an 8.7x4.6m cushion of 0.5psi, and would take four crew with four passengers.

An earlier hybrid concept in France was the 9.6m-long Bertin Terraplane BC7, which as a truck or bus variant had an all-up weight of 5 tonnes with a payload of 2-3 tonnes and top speed of 50km/h while in cushion mode, but the design of skirt used would wear quickly.



ABOVE: **Bertin developed several ACV vehicles, such as this Terraplane BC6** *(Image courtesy of The Hovercraft Museum)*

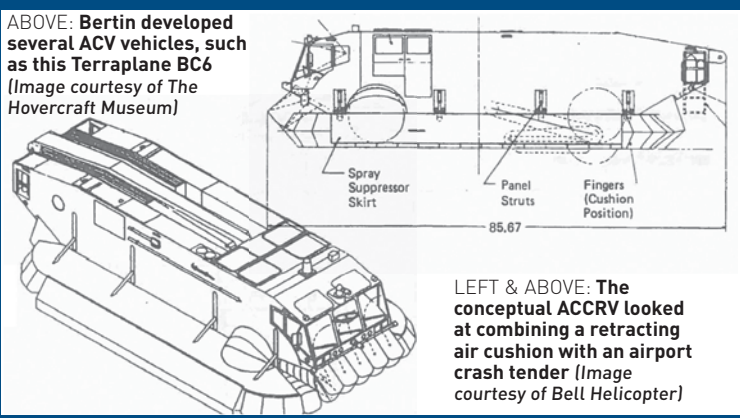

LEFT & ABOVE: **The conceptual ACCRV looked at combining a retracting air cushion with an airport crash tender** *(Image courtesy of Bell Helicopter)*

finds to be very effective, although adding wear pads to high-speed hovercraft skirts – which have very different operational characteristics – apparently leads to difficulties.

Whether a hoverbarge should be towed or incorporate self-propulsion is specific to each project, but Turner confirms that "there is great potential for ground contact systems for large hoverbarges in the right conditions".

The Otis Hovair Transit System is a very quiet type of hovertrain that runs on a very smooth guideway. There are 11 installations around the world featuring different models, with a hover height of about 3mm and maximum speeds of 25-35mph.

Frank Bares, engineering manager, shuttles, at Otis, explains, "Vehicles are pulled by cable in a side-guidance system. Under normal conditions, the air pads generally only need replacing at about 100,000-150,000 miles. The track bed is constructed to be extremely smooth and there is normally no direct contact between it and the air pads."

Braking is mainly through the cable system. He continues, "Drive motors for the towing cable are typically about 270hp per train, and each car is fitted with a pair of 20-25hp air blowers for the air cushion."

A number of very high-speed hovertrains, for example 250mph, were researched in the 1960s and 1970s, but were ultimately beaten by steel wheels.

There is a variety of relatively small- to medium-size, yet generally very efficient industrial air cushion machines for moving heavy loads over very flat, smooth and non-porous ground. Hover height is usually very small to provide better stability. It is said that 1-5kg per tonne of load is required to move an air cushion pallet across a smooth floor.

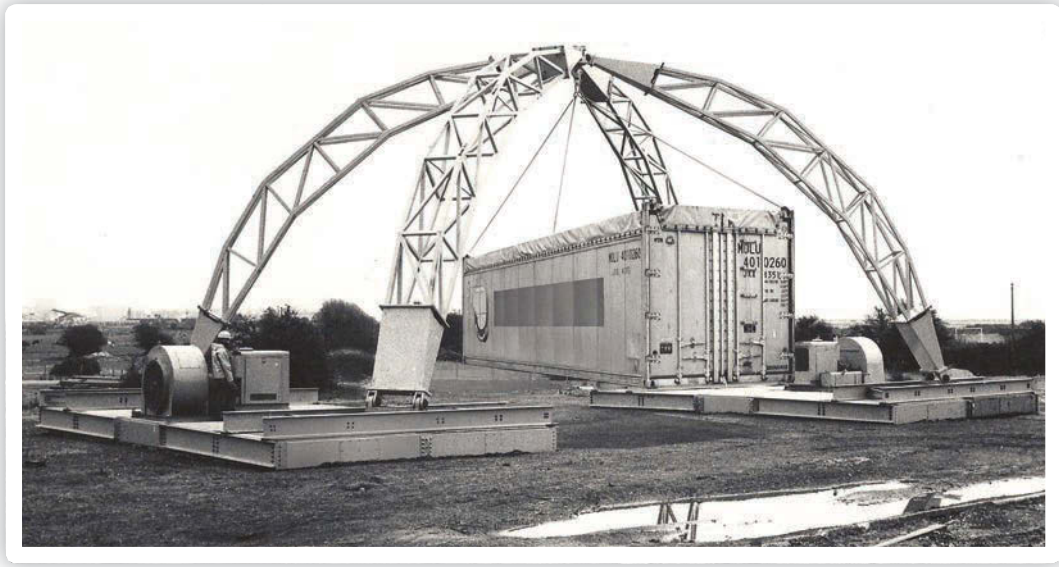





ABOVE & RIGHT: **Over the years, various systems have been developed for heavy movements over soft or sensitive ground** *(Images courtesy of The Hovercraft Museum and Hovertrans Solutions respectively)*





LEFT: **Hovering platforms can be towed, pushed or winched, and there has been some research into onboard ground traction devices** *(Image courtesy of The Hovercraft Museum)*

BELOW LEFT: **A Mackace Hoverbarge with wheels working on Margate beach in the UK** *(Image courtesy of The Hovercraft Museum)*

Still room for manoeuvre?

Warwick Jacobs, trustee at The Hovercraft Museum Trust in the UK, points out that quite a lot of patents lapsed before 1999, and that while some still exist for specific designs, there is significant potential with those available. Roger Lane-Nott, director general of the Agricultural Engineers Association, comments, "There is a developing market for air-cushion vehicle applications in agriculture. Probably the biggest advantage for those applications would be with regard to soil compaction. About 7% of arable land is effectively unusable because of compaction. Visible tracks in fields from agricultural vehicles show compacted areas that can't be used… it's a big issue.

"Air cushion technology could be applied to lighter machinery, such as smaller sprayers and cultivation equipment, for low crops if they are not affected by the skirts passing over them. Combine harvesters and most tractors are probably too heavy."

So it seems that without a dramatic breakthrough, air cushion technology seems set to remain as a very niche application, providing unique benefits when applied in the correct situations where no other forms of transport can handle the terrain (mud, snow, water, ice, etc). ACVs seem likely to remain in their specific niche area for some time to come. **iVT**

References and further reading:
1. Bell Aerospace Textron (1987). Air Cushion Crash Rescue Vehicle (ACCRV).
2. Ship and Marine Technology Requirements Board (1980). Stability and Control of Hovercraft - Notes for Commanders. London: Department of Industry.
3. Yun, L, & Bliault, A (2000). Theory and Design of Air Cushion Craft. New York: John Wiley & Sons Inc.

ON THE WEB

Complete ACCRV research document and more at:
www.iVTinternational.com

Design | Manufacture | Support



ABT

From concept to your assembly line, our experience is your competitive advantage.

www.abtproducts.com T+44(0) 1989 563656

E: info@abtproducts.com

FREE

ONLINE READER ENQUIRY SERVICE

Find out further details about the advertisers in this issue of *iVT International* online at:

www.iVTinternational.com



ROBERT LANG

Break the habit

IDLING ALREADY TAKES UP ENOUGH OF A MACHINE'S DUTY CYCLE WITHOUT THE OPERATOR LEAVING THE ENGINE RUNNING TO MAINTAIN A PLEASANT TEMPERATURE DURING DOWN PERIODS. CUSTOM-BUILT HVAC SOLUTIONS PROVIDE AN EFFICIENT, FUEL-SAVING SOLUTION

As a system supplier, Webasto offers heating and cooling solutions from a single source. Its units ensure a pleasant cabin climate not only during operation, but also during operational downtimes and breaks. The company develops and manufactures each heating and cooling system to the customer's specific requirements; OEMs therefore receive a custom-made solution for their off-highway machines. The resulting installation conforms to the high quality standards of the automotive industry.

The company has been developing, manufacturing and distributing coolant heaters for construction machinery manufacturers for many years. Liebherr, for instance, is one of several long-standing OEM customers that offers Webasto parking heaters as original equipment.

Blowing hot and cold

These heating solutions work independently of the engine. The robust Thermo Pro 50 Eco (24V/diesel) with a heating performance of 5kW, the Thermo 90 ST (12V/petrol, 24V/diesel), and the Thermo Pro 90 (24V/diesel) with a heating performance of 9.1kW, are particularly suitable for use in construction machinery. Should even higher heating performance be needed as a result of environmental conditions or technical requirements, Webasto's portfolio of coolant heaters includes units that offer a heating performance of up to 35kW. These units are not only suitable for installation as original equipment – they can also be retrofitted within one working day.

Webasto's latest model – the Thermo Pro 90 – is an excellent performer, and offers automatic altitude adjustment up to 3,500m. The altitude sensor, which is fitted as standard, guarantees optimum combustion in the heater, even at the low air pressures prevalent at heights of up to 3,500m above sea level.

At the heart of a parking heater is the burner. The main components of the burner are the combustion chamber, vaporiser and glow plug. The heater works by using a dosing pump to feed fuel to the vaporiser inside the combustion chamber. The heater's blower provides the air to create a combustible fuel/air mixture, which is ignited by a glow plug before a stable flame forms. A circulatory pump delivers a heat-carrying coolant from the vehicle's cooling system and circulates it around the combustion chamber. Warmed by the heat in the combustion chamber, the coolant medium is conducted into the vehicle's coolant circulatory system. The vehicle's heat exchanger transfers the heat from the coolant into the air, which is then blown into the driver's cabin by the vehicle's heater fan. This warm air de-ices the front windshield and warms the cab interior. This process also preheats the engine, making it easier to start, because it is now much closer to its operating temperature when the starter is engaged.

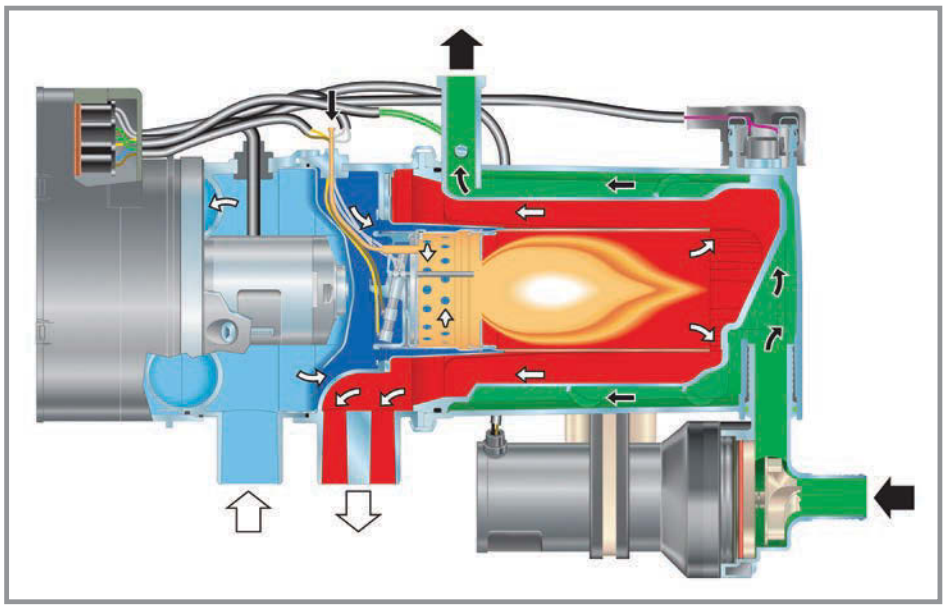

With its heating performance of 9.1kW, the Thermo 90 ST water-heating system ensures a warm driver's cabin and preheated engine

The benefits of the system include the engine running at its optimum operating conditions from the beginning, reduced fuel consumption, and the emission of fewer pollutants and CO_2. Furthermore, increased engine wear resulting from cold starts is avoided. Extremely low outside temperatures make engine preheating essential for some vehicles, if they are even to start at all.

As a result of the takeover of Diavia in 2012, Webasto today offers a comprehensive range of air-conditioning systems for off-highway machines. The systems ensure efficient cooling of the driver's cabin during both operation and breaks. Thanks to a broad product range, customers receive a custom-made solution – specially developed and manufactured for fitting to their machines as original equipment by the vehicle manufacturer.

Be it cooling performance, compressors, heat exchangers, air-distribution systems or operating controls, a wide range of high-quality components ensures that every customer receives an appropriate solution for their particular requirements. Depending on the specific installation location, in-roof, rooftop or in-dash air-conditioning systems can be assembled.

Engine-Off technology

Webasto developed its new Engine-Off technology for parking heaters and air-conditioning systems, and by employing this technology, unnecessary engine idling can be avoided. Idling often accounts for up to 50% of total engine running time in construction machines such as wheeled loaders.

Manufacturers, owners and lessees will profit from the benefits delivered by the Engine-Off technology – over both the short and long term. The system reduces the number of engine operating hours, which means that fuel consumption is also reduced and the total level of emissions is lower. Furthermore, service intervals are extended, the service life of the machine becomes considerably longer, and the resale value of the vehicle increases.

A further benefit is the big improvement in driver concentration, which offers an associated gain in productivity, because – irrespective of the external temperature – he spends his whole working day in a pleasantly conditioned cabin.

Webasto's Engine-Off technology means that the vehicle can be heated or cooled during operational downtimes and breaks, irrespective of whether the engine is running or not. This technology is available for fitting as original equipment, but it is also easy to retrofit because only a small number of additional components need to be integrated into the existing heating or air-conditioning system. Controlling the Engine-Off technology is simple: the driver needs only to activate the system before starting work. The temperature inside the cabin is then automatically maintained at the desired level. **iVT**

Robert Lang is director of product market management heavy duty of the Webasto Thermo & Comfort division

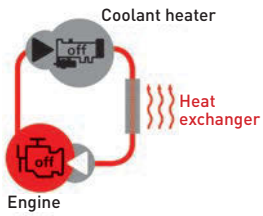

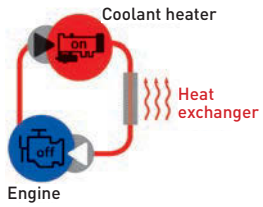

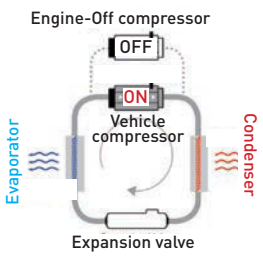

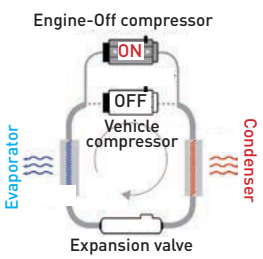

How Engine-Off technology works

Engine-Off Heating

• Short breaks: when the vehicle's engine is running, it generates heat that is distributed via the cabin's heat exchanger. When the engine is turned off, the Engine-Off system takes over. The parking heater's circulation pump ensures that the coolant continues to circulate through the system. This allows for the continued use of the residual engine heat to keep the cabin warm.

• Long breaks: if the temperature in the driver's cabin drops below a predefined value, the parking heater is automatically switched on.

Engine-Off Cooling

• When the vehicle's engine is running, the vehicle's own air-conditioning system cools the driver's cabin. The air-conditioning system's compressor is running.

• When the vehicle's engine is turned off, the vehicle's integrated air-conditioning system shuts down. At this point, the Engine-Off system activates the auxiliary Webasto Engine-Off compressor, which is powered by the vehicle's battery. In this way, the system ensures efficient interim cooling of the driver's cabin during operational downtimes and breaks.

Even though the Engine-Off system runs from the vehicle's battery, drivers need not worry that their engine will no longer start following a longer period of Engine-Off operation. During start/stop operations, pause cycles of between 5 and 30 minutes are normal and these can be easily mastered. The system is fitted with undervoltage protection for safety reasons. This shuts the system down automatically when the battery reaches the low voltage level.



As a system supplier, Webasto offers custom-made thermal management solutions for the heating and cooling of off-highway machines – not only during operation, but also during operational downtimes and breaks

CONTACT
www.webasto.com
news@webasto.com

DOUWE HILARIUS

Green and pleasant

BY MEETING TIER 4 FINAL WITHOUT THE NEED FOR EGR AND DPF, HI-eSCR TECHNOLOGY PROMISES NOx REDUCTION WITHOUT AN INCREASE IN PARTICULATES. REDUCED FUEL CONSUMPTION AND OPERATING COSTS ARE A MOST AGREEABLE SIDE-EFFECT

As heavy-duty vehicle OEMs prepare for the arrival of Euro 6 and Tier 4 Final emission regulations in 2014, a new technology from FPT Industrial reduces nitrogen oxide (NOx) pollutants by a remarkable 95%. Meeting the requirements for greener engineering without sacrificing performance represents a challenge for the industry as a whole – but it also presents an opportunity. For FPT Industrial, it led to the development of the innovative High Efficiency SCR (HI-eSCR) system.

NOx and particulate matter (PM) mass reductions have long been inversely linked, due to their contrasting reactions to combustion temperatures: a reduction in one leads to an increase in the other. In SCR systems used with EGR, before SCR converts NOx to diatomic nitrogen and water, EGR reduces NOx emissions in the combustion chamber through the recirculation of exhaust gas. However, that reduces combustion efficiency and increases the production of PM, necessitating a DPF for the exhaust gases.

To meet Tier 4 Final, FPT Industrial's next-generation HI-eSCR focuses on maximising combustion efficiency and reducing the PM produced by combustion, negating the need for recirculated exhaust gases and a DPF. The NOx is reduced in the HI-eSCR aftertreatment system, with everything regulated by a new engine control unit in conjunction with a network of integrated sensors.

In enabling the novel SCR-only technology, combustion efficiency gains have come through higher effective cylinder pressures, use of the latest-generation common-rail fuel-injection equipment with peak nozzle pressures of up to 2,200 bar, and changes to the crankcase and cylinder heads. In addition to the 95% decrease in NOx, the new system offers enhanced fuel efficiency, reliability and service intervals up to 600 hours, while also reducing running costs. With the entire exhaust system in a compact, fully enclosed structure, weight and installation space are also reduced.

HI-eSCR's development included the establishment of a number of notable patents. 'Closed' control allows precise dosing of AdBlue to cut the level of NOx entering the SCR system, while the adaptive dosing system is enabled through control technology based on the use of NOx and ammonia sensors. Thermally insulated high-turbulence mixing facilitates homogeneous hydrolysis of urea and correct distribution in exhaust gas flow, while improved thermal management speeds up SCR light-off in the cold part of the emission cycle.

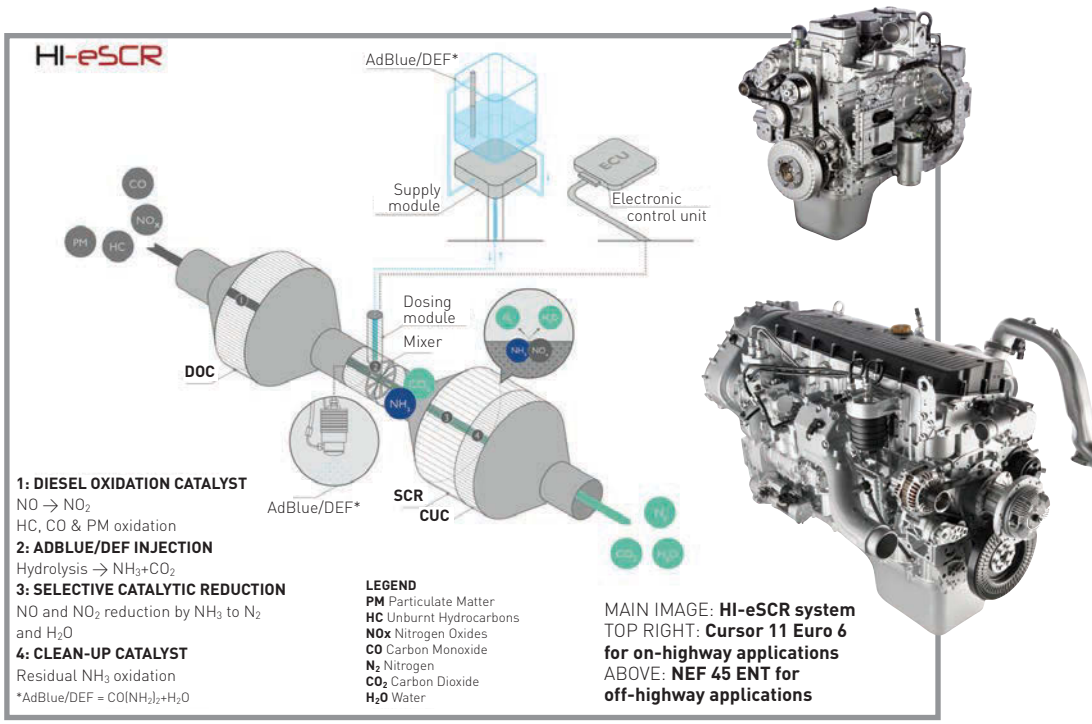

MAIN IMAGE: **HI-eSCR system**
TOP RIGHT: **Cursor 11 Euro 6 for on-highway applications**
ABOVE: **NEF 45 ENT for off-highway applications**

"The HI-eSCR system is a further step in FPT Industrial's ongoing development programme to maximise the performance of SCR technology, as we all strive for clean transport," says Massimo Siracusa, VP of product engineering. "As a catalytic reduction system alone, without the need for EGR, it's a unique solution unmatched in efficiency. In addition to complying with the upcoming Euro 6 and Tier 4 Final regulations for NOx emissions, it offers customers reduced fuel consumption and operating costs."

Driving force

As a specialist manufacturer of industrial powertrains for on and off-highway vehicles, marine and power-generation applications, FPT Industrial is the driving force behind a diverse range of brands, including market leaders Iveco and New Holland, and lists Caterpillar, Daimler, Ford, Hyundai, Perkins and Tata among its customers. Fitted with the new HI-eSCR technology, several of these companies have already claimed prestigious awards in their fields.

With FPT Industrial's Cursor Series engines, Iveco's Stralis Hi-Way won the 'International Truck of the Year 2013' award. Along with Ford-Otosan's New Cargo and the Mitsubishi Canter 4x4, three of the four finalists therefore featured FPT Industrial engines. The New Holland T4060F tractor was awarded 'Best of Specialised 2013' by the Tractor of the Year panel, and Case IH Steiger tractors excelled in the Nebraska Tractor Test Lab. A pair of FPT Industrial C90 650 engines propelled Fabio Buzzi's boat to a new record between New York and Bermuda in October 2012. He covered the nearly 670 nautical miles in 17 hours 6 minutes at an average speed of 39.49kts, beating the previous record by 4 hours and 33 minutes. **iVT**

Douwe Hilarius is operational marketing and communication manager at FPT Industrial

CONTACT
www.fptindustrial.com
sales1@fptindustrial.com

MARTIN RYLEY

Can the can

WITH THE POWERTECH PWL 4.5L, ONE ENGINE MANUFACTURER HAS EXPANDED ITS FINAL TIER 4/STAGE IV OFFERING WHILE GETTING RID OF THE DPF – REDUCING BOTH COST AND ENGINE PACKAGING CONCERNS

At Bauma in April, John Deere Power Systems (JDPS) introduced the PowerTech PWL 4.5L engine, which will meet Final Tier 4/Stage IV emissions requirements without a DPF. The 63-104bkW (85-140bhp) engine complements the John Deere line-up of Final Tier 4/Stage IV off-highway diesel engines rated 36-448bkW (48-600bhp) already announced.

The new PowerTech PWL 4.5L reduces cost and improves engine packaging by eliminating the DPF – while meeting customer performance expectations for applications in the 56-104bkW (75-140bhp) power segment. It is equipped with an Integrated Emissions Control system consisting of SCR, a DOC and cooled EGR technology. Elimination of the DPF was enabled through combustion system optimisation and improvements in SCR system conversion efficiency.

"We believe the elimination of the DPF will serve OEMs and end users well in the very competitive 56-104bkW (75-140bhp) segment, balancing packaging and product cost considerations with performance and operating cost requirements," says John Piasecki, director of marketing, sales and customer support for JDPS. "We expect emissions technologies will continue to evolve and improve, and we'll adopt those changes when available to improve the customer experience."

Third system configuration

The introduction of the PowerTech PWL 4.5L engine represents the third Integrated Emissions Control system configuration JDPS will offer for Final Tier 4/Stage IV. For the 36-55bkW (48-74bhp) power range, the company will offer models using a DOC/DPF without cooled EGR or SCR. The PowerTech PWL 4.5L in the 56-104bkW (75-140bhp) power range will be equipped with an Integrated Emissions Control system configured with SCR, a DOC and cooled EGR. Engine models above 104bkW (140bhp) will feature an Integrated Emissions Control system consisting of cooled EGR, a DOC/DPF and SCR. All John Deere Integrated Emissions Control systems are exclusively designed to meet the specific demands of off-highway applications in the given power categories.

"At John Deere, we tailor our Integrated Emissions Control system configurations to meet customer needs and Final Tier 4/Stage IV emissions regulations," Piasecki declares. "We're confident that all of our solutions will deliver industry-leading performance and value, while also meeting required long-term emissions compliance."

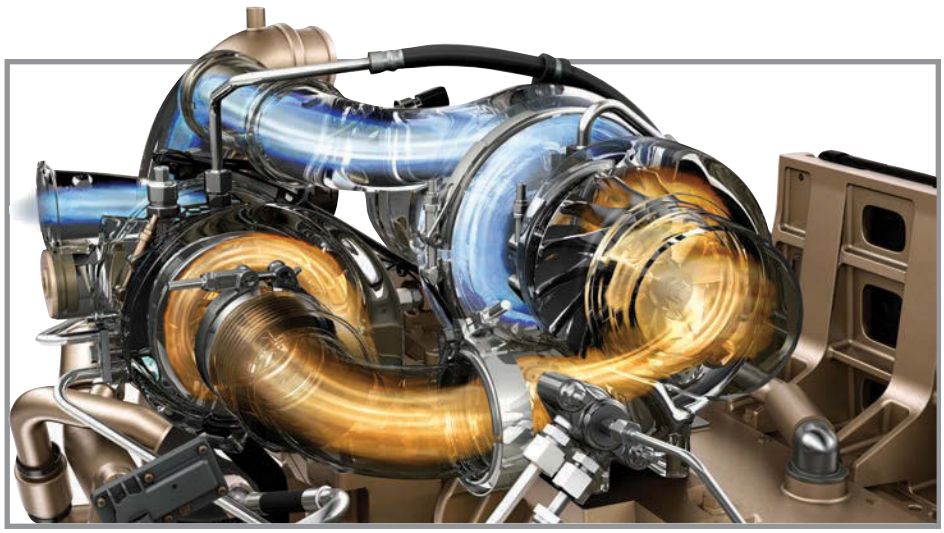

ABOVE: **Meeting Final Tier 4 doesn't automatically call for bulky aftertreatment systems**

JDPS attained an industry-leading fuel economy position with its Tier 3/Stage IIIA and Interim Tier 4/Stage IIIB engines. With the move to SCR technology for Final Tier 4/Stage IV engines, total fluid economy becomes important, and the company is confident that its total fluid operating costs will continue that industry leadership. Total fluid economy takes into account an engine's total fluid consumption, including diesel fuel and diesel exhaust fluid (DEF). DEF consumption with JDPS Final Tier 4/Stage IV engines will be 1-4% of diesel fuel consumption, depending on the application. Low DEF consumption also means that the DEF tank size can be smaller, minimising space required on vehicles; the DEF filter service intervals can be extended; and there are fewer on-site bulk storage requirements.

The company's Final Tier 4/Stage IV engines will provide the same or higher levels of power density and transient response as its Interim Tier 4/Stage IIIB product line-up. Models and power ratings for the full John Deere Final Tier 4/Stage IV line-up include:

- PowerTech EWX 2.9L: 36-55bkW (48-74bhp);
- PowerTech EWX 4.5L: 55bkW (74bhp);
- PowerTech PWL 4.5L: 63-104bkW (85-140bhp);
- PowerTech PSS 4.5L: 93-129bkW (125-173bhp);
- PowerTech PVS 6.8L: 104-187bkW (140-250bhp);
- PowerTech PSS 6.8L: 168-224bkW (225-300bhp);
- PowerTech PSS 9.0L: 187-317bkW (250-425bhp);
- PowerTech PSS 13.5L: 309-448bkW (414-600bhp).

"Staying true to our building-block approach, we have adopted the best available technologies to meet Final Tier 4/Stage IV regulations, while minimising the impact on OEMs and end users," Piasecki says. "The Integrated Emissions Control system in its various configurations represents technology optimisation that achieves emissions compliance, and delivers the power, performance, ease of operation, fluid efficiency, reliability, durability and economical operating cost that customers expect from John Deere."

John Deere Power Systems has an established record of reliability, accumulating more than 22 million operating hours with various aftertreatment technologies. The company claims a large dedicated in-house aftertreatment team, working with a mature exhaust filter and SCR supply chain, all to provide a field-proven Final Tier 4/Stage IV product line-up.

The worldwide John Deere dealer network of more than 4,000 service locations will be trained and prepared to fully support customers and their Final Tier 4/Stage IV engines. **iVT**

Martin Ryley is manager, marketing support and sales engineering EAME, for John Deere Power Systems

CONTACT
www.JohnDeere.com/tier4
jdengine@johndeere.com

KLAUS DARMSTÄDTER

Hot and bothered

THESE 'TEMPERATURE DESIGNERS' CAN BE FOUND IN THE HOTTEST CONDITIONS, DILIGENTLY WORKING TO PROVIDE HIGH-PERFORMANCE INSULATION SOLUTIONS FOR FUEL-SAVING PROTECTION AGAINST FIRE AND ACCIDENTAL CONTACT WITH PERSONNEL

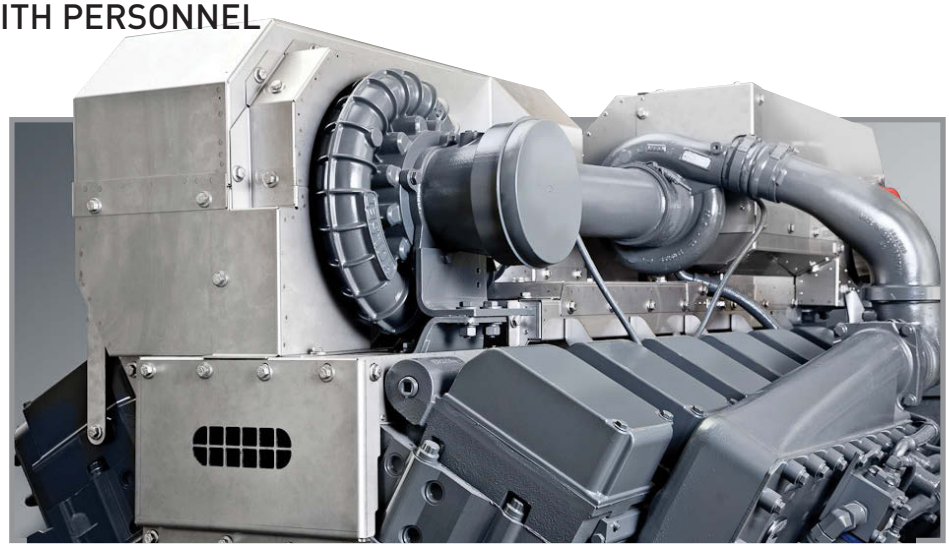

ABOVE: **Insulation cladding for fire protection in mining applications**

As a developer and manufacturer of acoustic and high-temperature insulations, Thermamax has enjoyed several years of strong growth. In vehicle applications, drive systems for off-highway sectors, and particularly in the mining industry, the company's practical solutions have brought great benefits worldwide. So what are these creative temperature designers doing that's so successful?

Along with its US subsidiary in Aurora, Illinois, the Mannheim, Germany-based temperature designer has been gaining increased market share in the American and European markets with its high-performance, environmentally conscious and fuel-saving insulation solutions. For operators of mining sites, protection against fire and accidental contact for personnel is an important concern. Clear, reliable reduction of ignition risks due to surface temperature increases reliability – resulting in not just higher productivity but also a means of reducing insurance premiums on the grounds of reduced fire risk.

But that's not enough for Thermamax, says sales and marketing director Steffen Cronauer: "Our business may be literally 'at the end of the pipe', so to speak, but our design solutions are most certainly not. In our view, a really effective insulation solution must involve more than just simple fire protection. And these days, in the off-highway sectors, it's also about exhaust emissions compliance."

The Thermamax concept of researching materials and applications, and transferring creative technologies from other applications into heavy-duty systems, is particularly suited to the off-highway market sectors. The company used its experience in these areas to influence total systems management and the effect on exhaust emissions. The pathway to these effects adopted a clear focus on heat as an important factor for the exhaust gas aftertreatment process.

The better the temperature technology, the better the overall system performance, says Cronauer: "Maintaining a constant system temperature has to be the priority, and maintaining that tight temperature window is the basis of that function. So why not consider an effective insulation of other components within the system such as mixing sections, exhaust manifolds and turbochargers, as well as compensators and flexible sleeves?" In doing so, Thermamax even surprised a few of its customers by offering the possibility of achieving not insignificant fleet fuel consumption savings.

Market growth

Thermamax solutions supporting OEMs and Tier 1 suppliers in emissions compliance are recognised today in the transportation, construction, mining and railroad market sectors. "The hotter the conditions are in a particular market sector application – that's where we're growing strongest," says Cronauer.

Thermamax and its subsidiary look for contact with engine and vehicle design engineers as early as possible to develop effective solutions. "We listen to what's needed and then find solutions that are going to remain effective over the complete lifecycle of the engine or vehicle in question," adds Cronauer. "And because that's what works for us and our customers, we've continuously developed as a systems supplier. As an example, we're always conscious of integrating the ease of installation and maintenance aspects into the design – that also reduces costs for the customer."

Current manufacturing orders for mining vehicles show how projects can be accelerated by rapid prototyping and having a well-equipped test lab constantly revealing new findings on innovative combinations of layered materials, accelerating the development process. Features such as an in-house hot-gas test stand and widespread testing equipment for thermography, vibration simulation and sound-level measurement allow for the realistic simulation of thermal conditions within the exhaust system and, above all, the testing of prototypes such as turbochargers, manifolds and elbows.

"Reducing the testing phase on the customer's side is one of our main objectives," says Cronauer. "Our customers appreciate this initiative. Helpful gimmicks such as our 3D printing equipment that showcases the product physically long before the prototype phase, and our ability to retrieve design data from older engines with 3D scanners, have often produced a satisfied smile from customers." In the production areas, Thermamax has also succeeded in considerably reducing movement of parts.

Developments like these are clearly not without purpose: with a healthy mix of constant innovation, strong focus on particular market sectors, and, above all, high levels of investment, Thermamax has grown in just a few years from a small, high-precision manufacturer, to a company with development skills and real volume-production capabilities. "Our design solutions for mining applications are operating successfully from Alaska to Australia in vehicles from the leading OEMs – you really get to enjoy seeing your work on the move then," concludes Cronauer. **iVT**

Klaus Darmstädter has been head of production and logistics at Thermamax Hochtemperaturdämmungen GmbH since 1998

CONTACT
www.thermamax.com
info@thermamax.de

ROBERT BUHL

Heading for trouble?

DURABLE INTERCONNECTIONS WILL AVOID THE PROBLEMS ASSOCIATED WITH THE USE OF STANDARD INDUSTRIAL PARTS IN THE HARSH ENVIRONMENT OF THE CYLINDER HEAD

Modern direct-injection diesel engines achieve their impressive fuel efficiency by keeping tight control of key processes such as load change and combustion. To facilitate this, electrical connections need to be integrated in the cylinder head – a particularly hostile environment that poses a number of challenges.

Cylinder head wiring includes electrical connections between the electrical components located in the cylinder head (such as injectors, injection valves, glow plugs, sensors and actuators) as well as the engine compartment harness. Because these connections have to be integrated within the cylinder head, they are exposed to a highly dynamic temperature range (up to 150°C), which causes massive thermocycling. To make matters worse, their location close to the combustion process and fast-moving metal parts causes a substantial vibration load. Then there is also the engine oil, which may well contain sulphides. Clearly this is not an environment for standard industrial products!

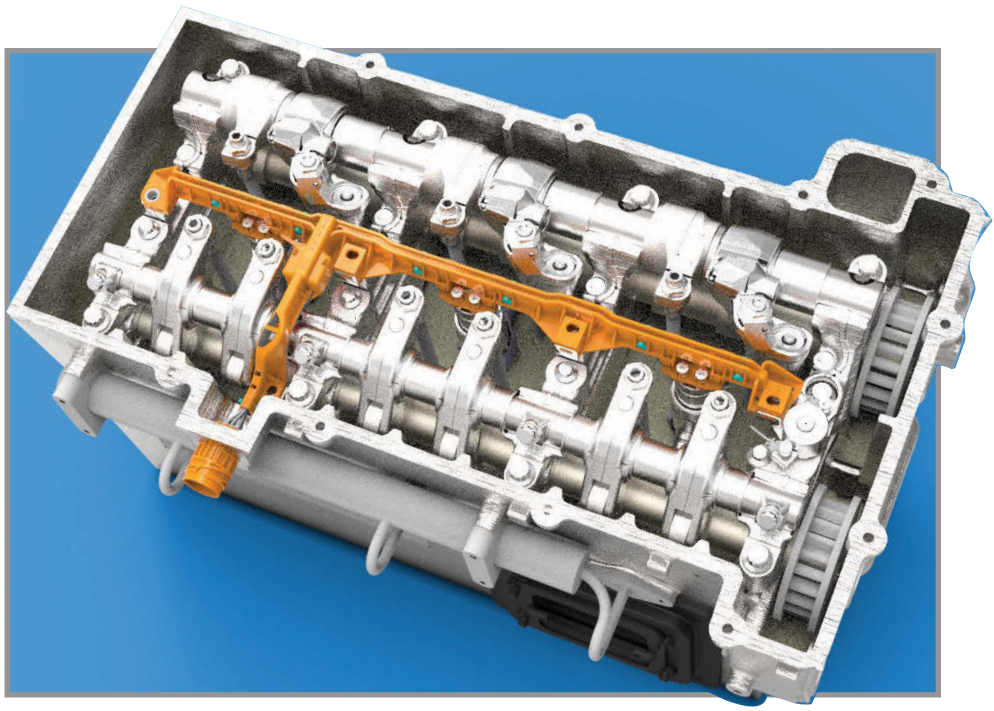

Cylinder head wiring for diesel engines with cable channel and pass-through connector

Customer specific

For these reasons, TE Connectivity has developed cylinder head wiring assemblies, for a variety of engine types, that have proved themselves in truck applications under harsh conditions. To achieve a durable component for each application, TE Connectivity fully tests every new design to the OEM's own specifications in its state-of-the-art testing facility in Bensheim, Germany. Usually the development of these customer-specific products includes not only the connector and wires but also the design of the brackets, cable arrangement and cable channel and selection of all related materials. The OEM is only required to design the required opening in the cylinder head and/or valve cover.

Typically, the cylinder head wiring culminates in a single connector that is mounted in the outer wall of the cylinder head or the valve cover. In general, the pass-through connectors that are used for this purpose can be divided into two groups: separable and inseparable systems.

An inseparable connection system excludes a mating interface connection on the outer side of the cylinder head. Sealing from the inner side to the outer side of the cylinder head is achieved differently. One option is to interrupt the wires to prevent oil from penetrating between the wire insulation and copper strands due to capillary action. The sealed electrical connection is made inside an inseparable connector that has an outer sealing function. Special wires with a sealing function between insulation and copper strands are the second option. The pass-through can be achieved by direct overmould in the valve cover seal or by a separate pass-through seal.

For every application

Because inseparable connectors are a cost-intensive technology, TE Connectivity has used its connector know-how to develop a separable connector system. This is based on the same principle as a common sealed connector but has been modified for particularly high vibration resistance in combination with high temperatures and the load due to engine oil. The connector housing, contact (terminal) and sealing materials have been carefully chosen for this application. The separable system consists of two counterparts – the pin side and the receptacle side. The difference from standard industrial systems is mostly seen on the pin side, with the oil-tight exit connector – this half of the connector being a special design for the extreme conditions mentioned above. On the other hand, the receptacle counterparts are existing connectors.

Through offering inseparable as well as separable connector systems, TE Connectivity widens the choice for OEM engineers to have the optimum solution for cylinder head wiring according to the application. The OEM can always rely on a fully tested solution that has proved its durability during intensive testing. A TE Connectivity product will always be the result of decades of automotive and truck interconnection know-how. **iVT**

Robert Buhl works in project management at TE Automotive, Bensheim, Germany

CONTACT
www.te.com
germany-pic@te.com

HUBERT BUTTERWEGGE

Built like a tank

OR MAYBE THE EXPRESSION SHOULD BE 'BUILT LIKE A TANK TRUCK HOSE' – BECAUSE ONE RESILIENT GELBRING REFUELLING HOSE WAS STILL GOING STRONG AFTER 33 YEARS OF HARSH USE ON BUILDING SITES

1979: it was a tough but successful year for boxing legend Larry Holmes, who fought – and won – in three heavyweight boxing world championships. In Germany, Helmut Schmidt headed the government, while dictator Idi Amin was overthrown in Uganda. Volker Schlöndorff's *The Tin Drum* was in the cinemas – and refuelling specialist Elaflex supplied 40m of ContiTech's Gelbring high-pressure tank hose to Tanktechnik Huth in Kelsterbach, Hesse, Germany.

Since then, this drum hose has been subjected to the harsh conditions on building sites on a daily basis. When the Bunte construction company from Papenburg purchased a 1982 Unimog U435, the tank and hose from the previous vehicle was mounted on it. This assembly has since proved to be both inseparable and indestructible.

Elaflex fitted the hose with auxiliary equipment, tested it, and delivered it together with one of its automatic ZVA nozzles. Manufactured by Elaflex partner ContiTech in Korbach, Gelbring is ideal as a drum hose for all kinds of mineral oil products. It can withstand temperatures from -30° to 90°C, with intermittent peaks in excess of 110°C. Its inner rubber is resistant to swelling and leaching, is flexible at low temperatures and does not discolour or harden. Two low-stretch textile braids ensure minimal increase in volume under pressure. The outer rubber is highly wear resistant and impervious to harsh weather.

Highly resilient

"Our refuelling hoses are usually replaced after 10 or 15 years, even though most are still perfectly fine. But many are still in use after 20 years or more," says Bernd Müller, a field employee with Elaflex. He had never, however, seen a hose that provided 33 years of service. "The vehicle workshop recommended that it be replaced with a new HD 25 Gelbring, although there was no discernible wear," Müller reports. "This shows that investing in the top price segment really does pay off."

Developed by ContiTech Schlauch and Elaflex back in the 1950s, the Gelbring hose continues to be produced today in virtually the same form and maintains its leading position in the market. Even in the highly demanding field of aeroplane refuelling, HP Gelbring hoses enjoy a notable share of the world





TOP: **The new refuelling hose is of course once again a Gelbring**
CENTRE: **The real thing: the hose has survived 33 years without major signs of wear**
BOTTOM: **Constructed in 1982: the Unimog is younger than the refuelling hose that has found its second home in it**

market. In the meantime, several Gelbring variants for biodiesel and biofuel oil have also been developed.

Wide product range

The ContiTech range of refuelling hoses includes everything from process-patented petrol pump hoses to tank truck hoses. The petrol pump hoses do not bleed colours and are conductive, extremely lightweight, flexible, buckle-proof, weather-resistant and can be rolled up. They are produced with a very smooth finish in bright colours and guarantee a calibratable volume increase. The compounds used ensure high resistance to swelling and diffusion. The hose-in-hose principle ensures that gas is automatically fed back, which represents an active contribution to environmental and health and safety protection.

The tank truck hoses are extremely easy to handle. They can be laid out and rolled out easily, are flexible, lightweight and, even without steel coils, can be driven over. They can be used in a wide range of temperatures and comply with EN 12115 and 176.

All products in the ContiTech Industrial Hoses fluid segment boast high resistance to temperature, pressure and media. They comply with national and international standards as well as individual customer specifications. The product range includes hoses for various sectors, including the food and beverage industry, the chemical and petrochemical industry, water treatment, mining, the steel industry and mechanical engineering as well as other high-quality hoses for a variety of applications with customised performance features. **iVT**

RIGHT: **Easy to handle: the tank truck hoses from ContiTech**



Hubert Butterwegge is head of marketing and sales in the PMS Industrial Hoses segment of ContiTech Fluid

CONTACT
www.contitech.de
hubert.butterwegge@fluid.contitech.de



stucchi.it



- Flat face technology: minimum spillage, reduced contamination
- Easy connection with internal residual pressure
- Optimized pressure drop
- Optimal resistance at impulse pressures
- Compact dimensions
- Safe and simple to use
- Fire tested, Lloyd's certified

Stucchi®

L S HARRIS

The future is electric

WHETHER IT'S FINDING NEW APPLICATIONS FOR SPECIALITY ELECTRIC-POWERED MACHINERY OR COMBINING EUROPEAN DESIGN WITH ASIAN MANUFACTURING, ELECTRIC DRIVE IS THE FUTURE, BELIEVES LEIF SVENSSON

Leif Svensson, VP of sales Western Europe for Curtis Instruments, directs continent-wide sales organisations in the UK, France, Germany, Italy and Sweden. With a demanding travel schedule, Svensson uses his time on the road to listen to audio-books as well as contemplate solutions for today's electric vehicle business challenges. We caught up with him recently near his HQ in Stenkullen, Sweden, and asked some questions about the industrial vehicle industry. Here are a few of his insights.

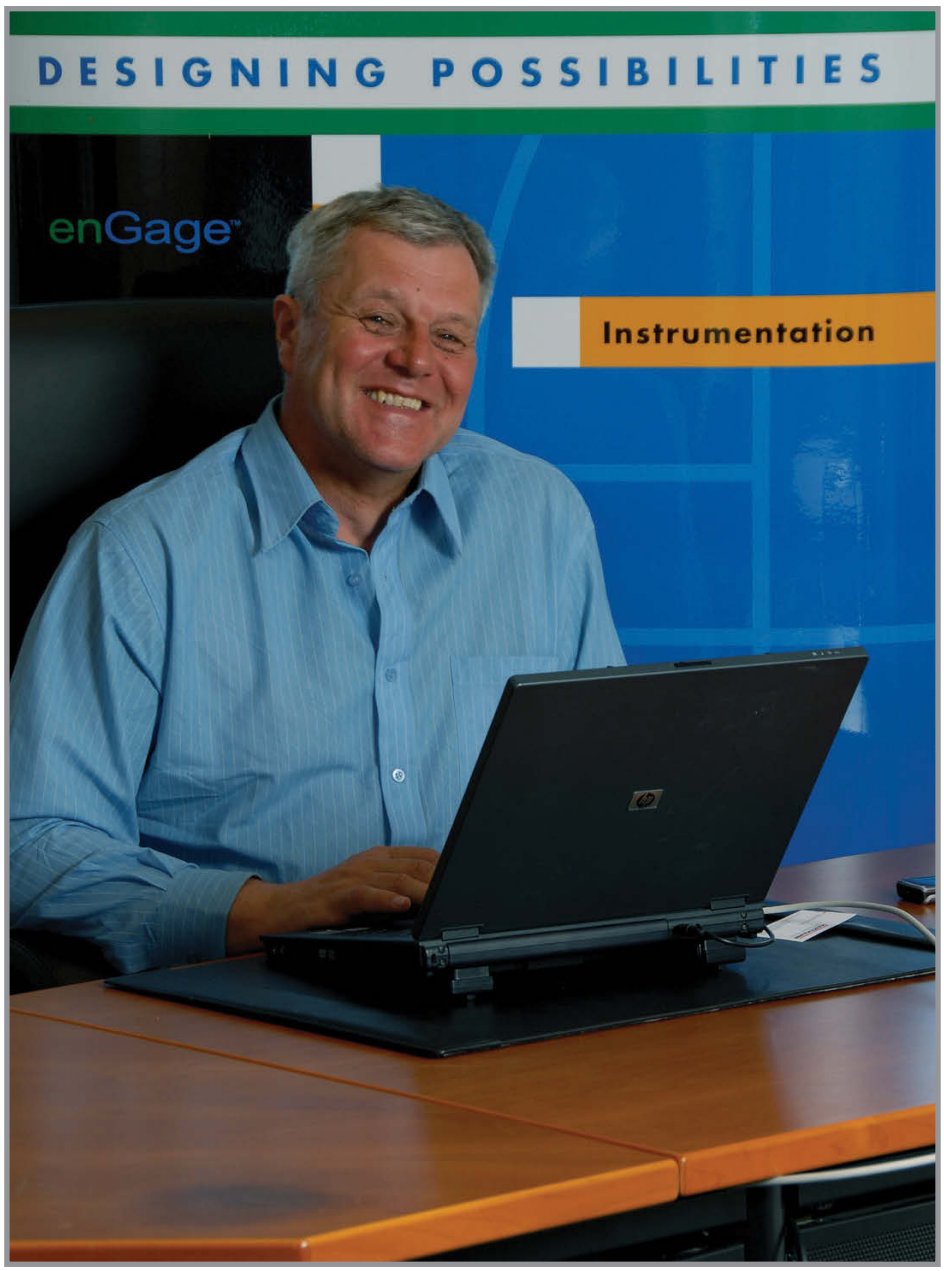

What technological developments do you foresee in the European forklift and materials handling industry over the next five years?

Today's sophisticated forklift trucks constitute a heavy investment in materials handling and a very competitive situation. Manufacturers will therefore continue to evolve more user-friendly equipment and higher-efficiency trucks.

For efficiency, battery life is important, but so is the quality and reliability of the trucks, which should have a very low downtime. The equipment needs to be regularly serviced of course, but in-between breakdowns are not acceptable. Downtime costs end-users a lot of money so they want efficient equipment that works. This is a challenge with trucks that are used in demanding situations. There's a lot of wear and tear, not only because of the industrial environment but also because they are driven hard. So it's not just the technology that has to keep evolving – the trucks themselves must compete in withstanding rough use.

Have recent European economic events affected the trend towards electric vehicles?

When there is a downturn in the economy there are always fewer government-sponsored environmental programmes, so from that perspective it slows down development. Still, there is a huge movement in Europe towards electric vehicles of all kinds.

Are there any other notable trends in the electric vehicle marketplace?

We are seeing a big shift in municipal utility vehicle use, going from petrol to electric-powered, in functions such as public transport and delivery. That trend is ongoing, irrespective of the European

economic situation; it just moves faster whenever there is more government legislation concerning noise and air pollution.

For industrial vehicles, the trend is towards more types of speciality electric vehicles. For example there is an EV to empty a container packed with boxes. You just drive it up to a container, insert a transportation belt and unload the contents.

There are so many more applications today for an EV. At an airport you'll see all sorts in use, such as pushback tractors to move aircraft on the tarmac – again, driven by legislation demanding lower CO_2 emissions. We need more politicians who are brave enough to make those decisions, to pass legislation that will drive the push towards electric.

What do you see as the greatest challenges facing your business today?

Customisation for specific applications – that's what it's all about. At Curtis, we take our standard products and adapt them for the customer's use – mainly through customisation of the software. So we have dedicated technical teams throughout Europe who are capable of supporting the customer. Technical customer support is a good proportion of our strength. So is logistics.

Manufacturers don't want to have a huge stock or long delivery times. That challenge, that cost, has shifted to the supplier. We have two logistics centres in Europe keeping a huge supply available to support just-in-time delivery for our customers.

There is always the challenge to be better than your competition. For our long-term growth that means being the best value for money but not necessarily the cheapest. We have a huge investment in customer support to make sure they get the best out of the product – to optimise its possibilities.

Likewise, what do you see as the greatest opportunities?

We will see growing use of forklifts and specialised industrial vehicles; new designs to support new materials handling efficiencies. There are many potential applications, as we have already seen in airports – moving people and positioning aircraft, etc. We are also working on many projects for specialised utility vehicles.

Do you have any advice for industrial vehicle manufacturers seeking to develop their business in European markets?

There's an interesting example of a Chinese forklift company selling trucks, but two years later the customers could not get spare parts or the level of support they expected. So what is important for anyone looking to sell materials handling equipment into Europe is that they ensure that the service and supply are independent of the importer, so that even if the importer disappears, there are still spare parts available for European customers. That's been a big issue for several of the Chinese forklift manufacturers. A brand name can be destroyed when someone needs spare parts and cannot find them because the importer has gone. My advice to anyone wanting to sell in Europe is to make a good contract with a service and spare parts organisation.

Speaking of that example, how do you perceive the increasing strength of Asian competitors in the European forklift market?

I see a critical move to less complex, lower value forklift trucks manufactured in Asia, in terms of both parts and full assembly. Some large US companies have manufacturing plants in Asia for lower-end machines such as pedestrian forklift trucks. They are high volume, similar in look and less complex. It's a big shift for Curtis. We went from being the leader in supplying electronics for those smaller, less complex EVs, to being the leader in supplying more complex trucks that require many controllers, a lot of software, lots of special features. We may be doing less volume but the dollar value goes up because of the complexity. That's a definite shift industry wide, with Asia taking over the lower end of the market.

You manage a European-wide operation. Can you talk about your leadership style? How do you motivate your pan-European team?

Management is useless. People don't want or need to be managed. People look for leadership. Leading people is different from managing them. It takes more effort and commitment, better communications. If people trust their leadership they will always give their utmost.

Leadership is complex, we could talk about that for hours! What's important in an organisation is that you're allowed to take the initiative and make mistakes. If you're afraid to make a mistake you'll never do anything. So I hope we've created an environment where people feel they are allowed to try ideas and if a mistake is made it's not the end of the world; we correct the mistake and move forwards.

You also have to be fair to everyone and that means that you have to treat everyone differently. If you believe you can be fair by treating everyone the same then I think you have missed the whole point of what leadership is about. If you believe everyone should work exactly the same way, you will find a lot of people being inefficient. If you allow them to be different, and work towards a common objective, they will be much more efficient and have more motivation in their work.

It's important that people know they have the freedom to achieve in their own unique way for the company, and to be rewarded for that – not for following a uniform way of working.

As part of a global company, do you also interact with your counterparts in Asia, North America and South America? What kinds of information do you find it useful to share?

We use our global strategy to support collaborative projects. For example, in Europe we are developing projects with a German subsidiary of a manufacturer, including a forklift truck that is to be designed in Europe for European use but produced in Asia at low cost. We work intensively with those companies in Europe on the development phase. We have all kinds of support engineers at those companies to design the vehicles and develop software and do the tests, and then they are manufactured in Asia.

That's the beauty of owning subsidiaries in 17 countries worldwide and the benefit of having sister companies in Asia. Being as strong as we are in Europe is very important in helping our counterparts in Asia design products specific to the European market. It's a truly global effort and a key to our success that we can help our customers design their vehicles in Europe for manufacture in Asia.

How do environmental issues guide your business strategy?

Our business strategy is led from Mt Kisco, New York. We are striving to be a green company and are working towards ISO 14000 certification in all our locations. As we work with electric drive systems, and that is considered to be environmentally friendly, we constantly see new applications for EVs. From that perspective we are consistently monitoring trends and redirecting our business strategy as needed. We are currently exploring more light on-highway applications and adding resources to support our customers strongly for legislation and everything else involved in designing street-legal electric vehicles.

In Europe we have about 30 light on-highway products we are actively working on, in all different sizes and time frames – from a few to many years. It's something that is coming, of course. We see it happening now in cities that legislate green zones where only electric or hybrid vehicles are allowed. This is a development we are watching very carefully.

Any closing thoughts?

Electric drive is the future! **iVT**

L S Harris is a business and technology writer based in the New York City area. She can be reached at lshwrite@optonline.net

CONTACT
www.curtisinstruments.com
www.evbatterymonitoring.com

MARK WASS

On the right track

SPECIALIST ROAD-RAIL MACHINERY HAS A HOST OF CHALLENGES TO MEET IF IT IS TO ENSURE SAFE OPERATION. CHOOSING THE CORRECT CONTROLLERS AND INTERFACES HAS NEVER BEEN MORE VITAL



LEFT: **Operator cab display showing the vehicle status is fully programmable using the ifm CR1081**

BELOW: **Rail-Ability Rail-Reach III, mounted on the MAN hybrid 4x4 chassis**

BOTTOM: **ifm's range of new 32-bit safety controllers e1 and TuV approved to SIL/pLd**

Rail-Ability has become one of the UK's leading manufacturers of specialist road-rail machinery for carrying out railway maintenance, renewals and infrastructure installations. The company's latest rail-reach access platform uses a hybrid MAN TGM 4x4 18.290 rigid-body truck as the standard base vehicle.

This vehicle is equipped with a three-person cab and fitted with a pair of Rail-Ability designed, constructed and fitted hydrostatically driven and braked rail axles. It is also equipped with fully protected inboard rail-wheel disc braking, acting directly on each of those wheels.

The base truck uses two of ifm's safety controllers (the CR7201 and CR7506) to control all the safety functions of the rail systems in accordance with BS EN ISO 13849. The communication and control of the truck functions is possible via the J1939 CAN interface. Simply connecting to MAN's KSM body builder's interface enables both reading and writing of data.

One of Rail-Ability's reasons for choosing ifm was that, as well as being E1 approved, the ifm controllers are approved to the railway specification of BN 411 002 (DIN EN 50155 point 10.2). The ifm CR1081 interface display shows all the relevant information to the operator in the cab, plus secure datalogging of all system information and functional performance, utilising the 1Gb of mass storage available in the device. Both GPS and GPRS communication are also possible with the installation of the CR3106 unit.

A double knuckle-boom manipulator crane with a manipulator grab and/or winch facility in front of the rail-reach boom on the mobile elevating work platform (MEWP) modules is a recommended optional feature for the handling of overhead-line-equipment structure components or other similar equipment. This module is fitted with hydraulic outrigger legs for enhanced operation when the free-on-rail mode is not required, which also enhances the module mounting and demounting procedure and enables operation of the crane and MEWP in road mode.

Decentralised control

The use of multiple CR7506 safety controllers allows the decentralised control of all safety functions of the MEWP, interfacing with both the ifm systems on the base truck and crane using the safe bus standard of CANopen safety. Current work platform loads are displayed to the operator in the work platform itself via another CR1081 unit.

With both the safety controllers and the display units being freely programmable with the CoDeSys software development tool, it enabled Rail-Ability to design and develop its own software independently, allowing for the continual improvement of product features. "With what we've been able to achieve with the current line of ifm products, we look forward to implementing the new 32-bit controllers, where this can be expanded further," says Tim Rowe, design engineer, Rail-Ability.



During the Bauma 2013 exhibition, ifm launched the newest members of the family – the 32-bit safety controller range. This has been developed according to current standards for hardware and software and certified by TÜV. These new devices are a perfect choice for complex and demanding control functions, due to the new 32-bit tri-core processor. Another feature is the graded error handling, where the user can define response thresholds.

The fast 32-bit safety controller can be used as a way to switch off in case of serious errors and bring the plant into a safe state. In the event of less serious errors, parts of the plant in previously defined areas can still be used. Not all components have to be switched off. Predefined functions already exist for this.

The behaviour of the inputs and outputs can be adapted to the respective application easily and precisely using the CoDeSys programming software. With four independent CAN interfaces available, two CAN Safety networks are possible. The R360 safety controller is a completely new development in a tried-and-tested IP67 housing – and even under extreme operating conditions it guarantees its monitoring and protection function. **iVT**

Mark Wass, UK mobile industry sales manager, has been at ifm for 13 years, and involved in the mobile industry for 10 of them

CONTACT
www.ifm.com/uk / www.railability.co.uk
Enquiry_gb@ifm.com

LILIA LITAU

DO touch that dial!

OEMs LOOKING FOR A FLEXIBLE, EASILY READABLE CANBUS-ENABLED MULTIFUNCTIONAL DISPLAY WILL HAVE A HARD TIME KEEPING THEIR HANDS OFF THIS LITTLE BEAUTY

Besides safety and efficient machinery use, the well-being factor in the cockpits of mobile working machinery for construction and agriculture is of utmost importance. Motometer is reflecting this trend with its new MCA 232 display instrument, which offers more flexibility in the display of data and is easily adaptable to the needs of the operator.

The CANbus-compatible multifunctional MCA 232 display is freely configurable and can be installed with eight individually selectable indicator lights or six indicator lights plus two switches (for the adjustment of display options). All of the signals coming from the CANbus and the analogue inputs can be indicated on the integrated LC-display (e.g. as a bar graph, value field or bitmaps).

The MCA 232 features a dot display, offering clear representation that is easy to read at a glance. This enables simple and quick monitoring of vehicle functions by the operator. The instrument consists of a freely programmable, monochrome LCD display (128x118 pixels) with an LCD backlight for status announcement in different colours. Up to eight SMD LED indicators, a buzzer and two switching outputs complete the instrument.

Configuration and design

The MCA 232 is configured simply and comfortably. A variety of data – such as temperature, pressure or an odometer – can be displayed. MCA 232 is optimally equipped with CAN to ensure a transmission rate of up to 1Mbps, and it features one CAN interface (protocol standard 2.0B), six digital inputs and three analogue inputs.

A special printing process allows for the so-called 'dead-front' effect. In this version, the reverse side of the cover foil is printed in black, meaning the colour of the warning field will be visible only when the LED lights up, which lends a distinctive and attractive appearance to the design.

To avoid unexpected failure of machines, CANbus errors can be displayed, so the operator knows exactly where the error is and is able to give the workshop a detailed failure description. The integrated eight LED indicator lights and the LCD backlight in a variety of colours make possible the visualisation of different situations. The optional buzzer directs the attention with several sound signals for different incidents. In addition, when switching on, the check control for three seconds ensures greater security and increases the efficiency in commercial vehicles.



MCA 232 is a multifunctional display and is easily adaptable to the needs of the operator

Whether in the brightest sunshine or darkest night, the anti-reflection-coated foil means there is a perfect view of the display. These robust instruments are resistant to oils, hydraulic oils, grease, fuels and all standard biological fuels, meaning the MCA 232's permanent resistance to deformation, position effects and ageing are bound to impress.

This resistance, and the operating voltage between 8 and 36V, makes the MCA 232 highly suitable for construction machinery, commercial vehicles and many other types of vehicles, from the public service and agricultural sectors, to stationary motors or working equipment. The display also impresses with its simple-to-install and compact casing, at 80mm, with IP67 protection at the front, and suitability under temperature extremes of -40° to +80°C.

The all-purpose CAN-Keypad

Another of Motometer's CANbus-compatible products is the universally usable CAN-Keypad, which offers the individual configuration of each field. Each field can be used optionally as a display, switch, toggle or key element. The installed RGB-LEDs permit separate illumination of every field, with an integrated light sensor detecting the level of the light and regulating the luminance of the symbols.

Celebrating its centenary last year, Motometer has enjoyed a prominent place in the automotive sector ever since 1912 because its products continually set milestones. The company sells products worldwide for vehicle manufacturers, repair shops and system engineers. Its product portfolio includes calibration and test equipment, as well as tachographs, data management with telematics solutions, display systems, sensors and body electronics. **iVT**

As contact person for all communication subjects, Lilia Litau has worked for Motometer GmbH since July 2012



The CAN-Keypad is universally usable and offers individual configuration of each field

CONTACT
www.motometer.de
info@motometer.de

PETER FEUCHT

Inside job

THE LATEST TECHNOLOGY FOR PRECISE IN-CYLINDER MEASUREMENT CAN HELP IMPROVE PRODUCTIVITY, AS WELL AS REDUCING THE OVERALL COSTS OF INSTALLATION

When identifying key enabling technologies related to automation, precision, efficiency and cost optimisation in hydraulic and pneumatic systems, it is important to consider the different linear sensing technologies available to the industry today. This understanding will enable OEMs and system design engineers (hydraulic cylinder manufacturers) to install systems that perform reliably in the mobile machinery environment, improve productivity, and reduce the overall costs of installation for in-cylinder assembly and operations.

The potential and utility of linear positioning has advanced considerably of late. Advances in sensor technology, when coupled with new controllers and displays, enable engineers to develop closed-loop position-control systems that were not very common even just a few years ago. Mobile and off-highway machinery manufacturers are increasingly using these new systems to address challenges and introduce new products to the market at a steady pace.

In general, most industrial vehicle manufacturers require a reliable, cost-optimised system for in-cylinder sensing in order to replace other existing solutions such as external linear potentiometers or rotary sensors. Together with its certified cylinder partners, MTS has developed strong relationships, which means OEMs can enjoy reduced installation costs and improved system solutions by installing a smart cylinder onto the machine.

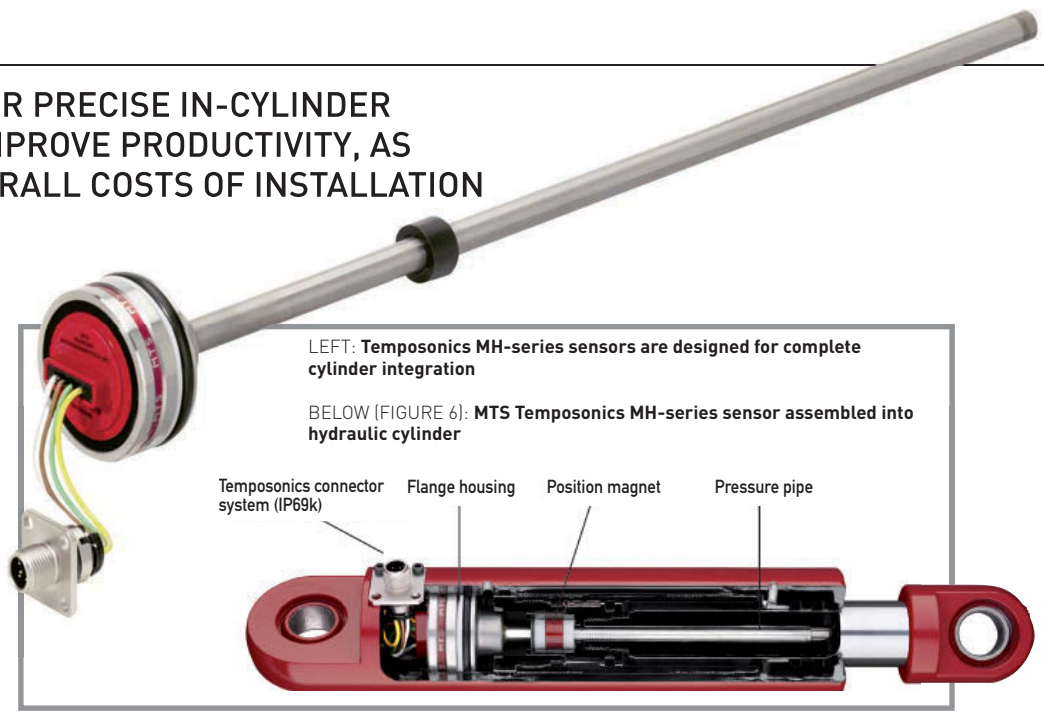

LEFT: **Temposonics MH-series sensors are designed for complete cylinder integration**

BELOW (FIGURE 6): **MTS Temposonics MH-series sensor assembled into hydraulic cylinder**

Position-sensing technologies

It is important for designers and engineers to fully understand how linear position sensors work, as well as the benefits and drawbacks of each technology. Today, there are many options, ranging from low-cost, simple solutions to advanced systems that offer unique levels of performance at slightly higher costs.

The following is a short summary of the most prevalent linear positioning technologies used in these applications today.

Resistive/potentiometer: In a resistive system, a wiper contacts the resistive element, so that the resulting resistance between the end point and the wiper can be measured (see Figure 1). These are typically inexpensive and easy to use. Because of the contact-based design, the shock and vibration rating is limited. As a result, life expectancy is shorter than with other technologies. The resolution has limited incremental steps and is also affected by noise.

Inductive – LVDT (linear variable differential transformer): These systems use one inner (A) and two outer (B) coils to measure the displacement of the pushed rod (Figure 2). The moving (pushed) rod is mechanically linked to the moving parts. This non-contact technology is typically used for small stroke range applications and has improved resolution

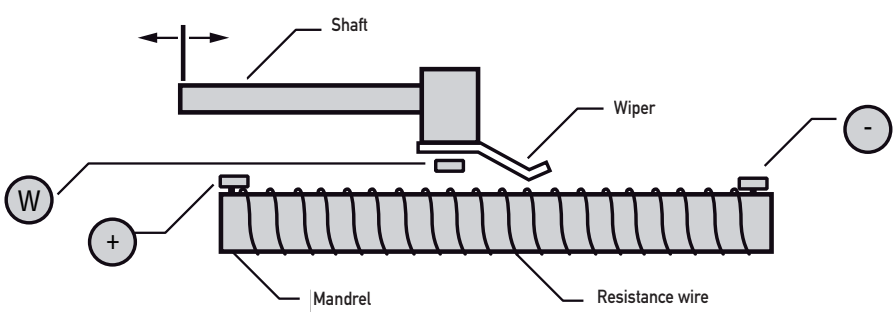

FIGURE 1: **Schematic of a potentiometer**

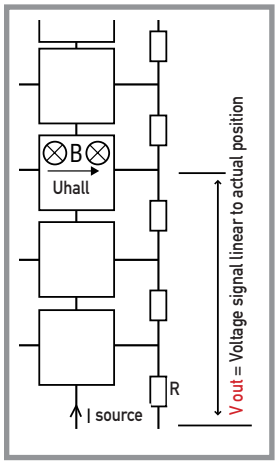

RIGHT (FIGURE 4): **Applied magnet fields induced from position magnet and stringed Hall elements. (I = induced current, B = applied magnetic field (from position magnet), Uhall = dropped voltage at Hall element, R = Resistor elements, strung together according to electrical stroke**

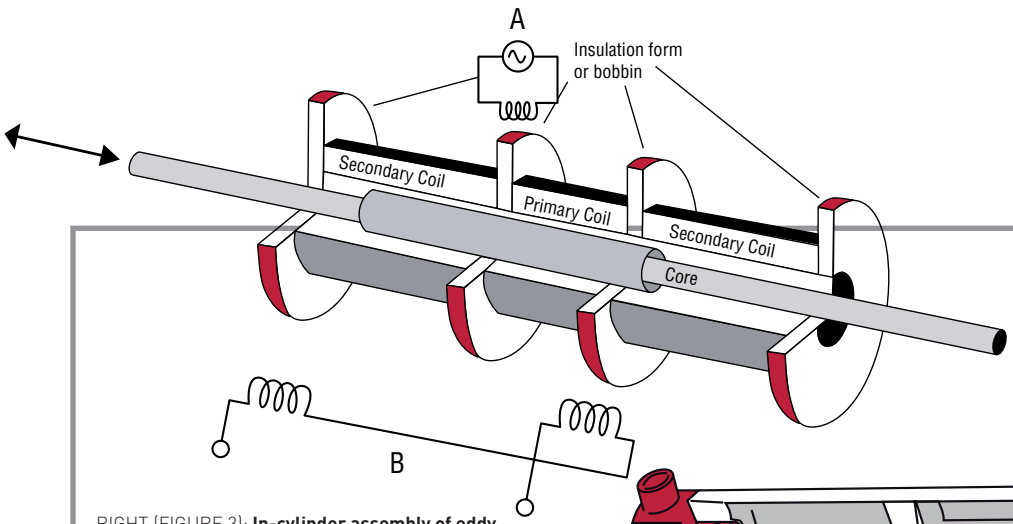

LEFT (FIGURE 2): **Schematic of LVDT. The sinusoidal signal in the primary coil (A) is produced by an oscillator circuit.The two secondary coils (B) are inversely phased, so voltages subtract each other. The soft iron core will travel and move along the coils – moving this rod generates inducted voltage signal linear to the actual position**

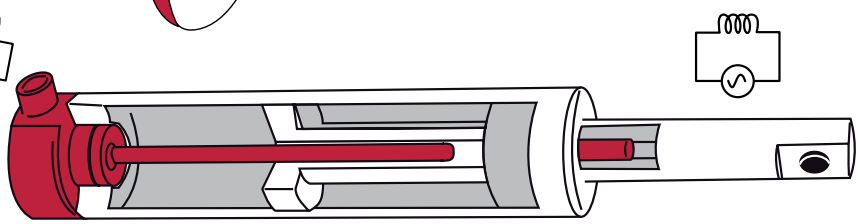

RIGHT (FIGURE 3): **In-cylinder assembly of eddy current sensor. The aluminium tube slides over the sensor rod, so that a proportional output signal linear to the displacement of the aluminium tube will be generated**

compared with resistive sensors (potentiometers). They also offer decent shock and vibration protection, depending on design. Because LVDT sensors need external attached electronics, this design is typically not used for in-cylinder assembly. Therefore additional EMI protection is required.

Inductive – eddy current sensor: The basic design uses a coil that is stimulated by a high-frequency AC voltage and an aluminium tube, which travels along the cylinder stroke (Figure 3). The AC voltage generates an electromagnetic field within the coil and induces an eddy current into the travelling aluminium tube, which (by retracting and extending the stroke of the cylinder) causes a change of electrical resistance (impedance) within the coil. This gives a proportional output to the electronic machine controller. The tube (OD 16mm) has to be fixed into the piston rod, so larger installation dimensions are required.

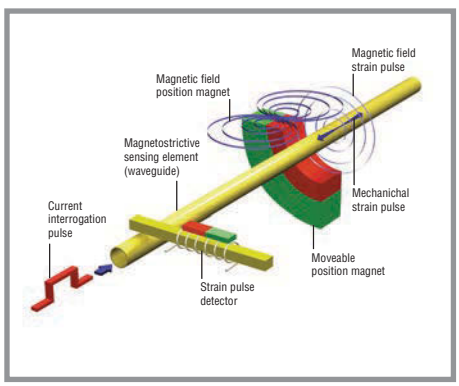

ABOVE (FIGURE 5): **All MTS linear-position sensors use the magnetostrictive principle with a specially designed magnetostrictive waveguide**

Hall effect: This principle uses a row of Hall-effect elements to measure the presence of a magnetic field from a position magnet in a travelling piston. The induced magnetic field causes a voltage drop in one or more Hall elements. The measuring of the voltages over resistive elements deduces the actual position of the magnet (Figure 4). This non-contact technology has limited resolution – restricted to the smallest incremental distance between each of the Hall elements – and stroke range. Life expectancy is better than with resistive means, but is still considered medium due to strung-together single Hall elements on a PCB inside the protective housing. Shock and vibration protection is limited as a result.

Magnetostriction: Magnetostrictive sensors, which are newer to mobile machines, operate by measuring the interference of a magnetic field generated in the wave guide with a permanent magnetic field induced by the position magnet installed in the travelling piston (Figure 5). Like LVDTs, Hall-element and eddy current technologies, this is also non-contact-based, and provides a very simple method of installation with an increased durability and EMI performance compared with the above-mentioned technologies.

In general, all these advantages are valid for in-cylinder assembly. More specifically, magnetostrictive sensors can provide higher resolution with increased shock and vibration ratings, due to fewer components being used. The EMI rating of 200V/m exceeds the required immunity rates of ISO 14982 (agricultural machines) or EN 13309 (construction machines).

MTS Sensors has been developing its Temposonics sensors based on magnetostriction for decades and makes available the most advanced solutions for mobile hydraulic applications in rough environmental applications. The performance and reliability for in-cylinder installation have been approved for many applications where productivity and lifecycles are critical to ongoing success, such as in agricultural, construction and municipal mobile equipment.

In addition to environmental conditions, the in-cylinder installation is made very easy. To give the overall cylinder package an IP69k rating, the linear position sensor comes with an integrated M12x1 connector system, which cylinder manufacturers prefer as there is no need for either soldering or crimping the electrical wiring (Figure 6). This allows for speedy assembly and ensures lower integration costs.

MTS Sensors has partnered with major cylinder manufacturers in an integration programme designed to optimise integration costs. By using hollow shafts or by gun-drilling the rod for sensor integration, the overall dimensions of the sensor, as well as the position magnetic, can be optimised. **iVT**

Peter Feucht is technical marketing manager mobile hydraulics at MTS Sensor Technologie

CONTACT
www.mtssensor.de
info@mtssensor.de

Grant an **excellent view** with BAUSER displays



DISPLAY
technology: TN, ASTN/FSTN and colour TFT
readability: excellent even under sunlight
resolution: from standard to high

EMISSION CONTROL FEATURES
compliant to Tier 4 and other emission standards

COMMUNICATION
CANopen, SAE J1939

I/O CONFIGURATION
flexible to custom requirements

CASING
different standard sizes

FRONT FASCIA DESIGN
custom in colour, form, design

DESIGNED FOR
rough and hard environmental applications

BAUSER®

BAUSER GmbH & Co. KG
Julius Bauser-Strasse 40
D-72186 Empfingen - Germany
Phone: **+49 (0) 74 85 - 18 1 - 0**
Fax: **+49 (0) 74 85 - 18 1 - 16**
E-Mail: **mail@bauser-control.de**
Web: **www.bauser-control.de**

MOBA®
MOBILE AUTOMATION

Intelligent Systems - Better Machines



HMIs | **Sensors** | **Controllers**



MOBA Components –
Optimized for mobile applications!

» Rugged and robust design
» Wear-free
» Modular principle
» More than 40 years of experience in mobile automation

You are a developer, design engineer, system integrator? Please contact us: +49 6431 9577-123

MOBA Mobile Automation AG
65555 Limburg/Germany
E-mail: info@moba-platform.com
www.moba-platform.com

THOMAS WITT

The mating game

THE EO-3 COUPLING SYSTEM ENABLES OEMs TO INSTALL HYDRAULIC LINES MORE QUICKLY AND SECURELY, FORMING LIFELONG BONDS AND AVOIDING LEAKS CAUSED BY IMPROPER INSTALLATION

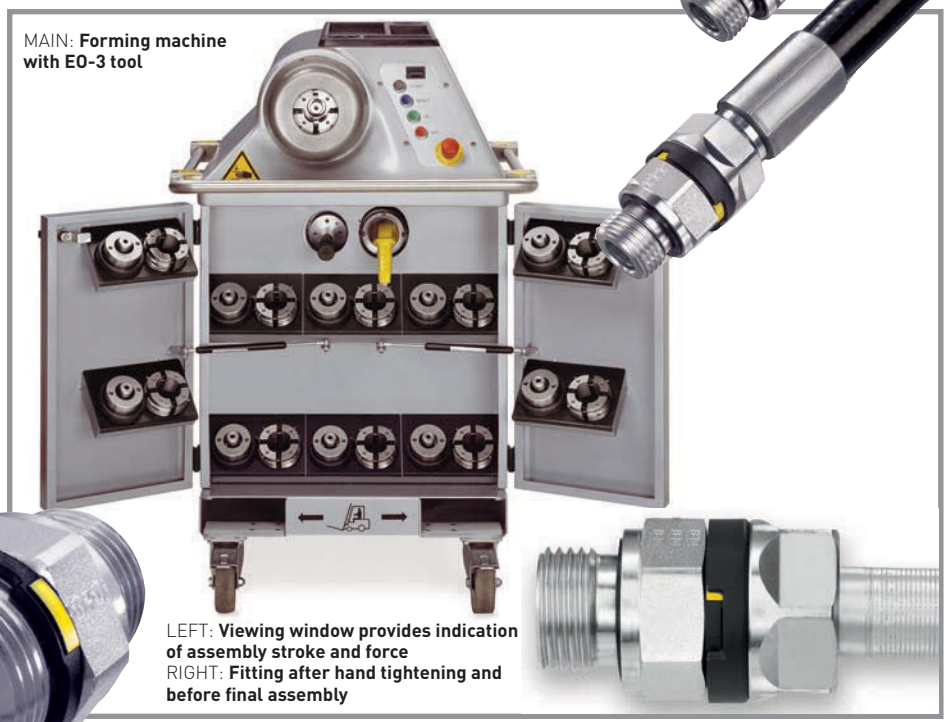

MAIN: **Forming machine with EO-3 tool**

LEFT: **Viewing window provides indication of assembly stroke and force**
RIGHT: **Fitting after hand tightening and before final assembly**

For more than 80 years, Parker Hannifin has been hard at work developing high-pressure hydraulic couplings and setting standards globally. Over the years, new geometries and materials have improved the performance, reliability and ease of installation of the company's original Ermeto couplings. Therefore, leakages in piping systems today cannot be ascribed to material defects, as they often were previously, but rather to improper installation. Assistance is provided in this regard by the new, quickly installable EO-3 coupling system. Its innovative form and technology raise pipe installation to a high level of quality, security and economy.

When it comes to couplings, correct installation is essential because the effects of leakages are far from pleasant, such as cost-intensive downtime, customer complaints, reworking, environmental damage and even accidents. Given this context, with the EO-3 system Parker has developed a coupling concept that sets whole new standards.



EO-3 couplings enable simpler, quicker and more secure installations – this has been achieved using a new thread technology. In contrast to all prior (DIN-standard) couplings, the EO-3 system is based on a 24° inner cone with integrated soft seal and a cone-shaped connecting thread. Claimed to be the first system of its kind, the EO-3 coupling enables the control of installation results from the outside. Through the use of a yellow signal ring, the installer can tell immediately whether the coupling has been made correctly.

EO-3 couplings can be installed considerably more quickly than conventional coupling systems on the market. Their installation requires neither a torque wrench nor a wrench extension – a common open-ended spanner will suffice. With pipe sizes from 25mm, an octagonal screw nut – instead of a standard hexagonal screw nut – ensures increased ease of installation. The octagonal screw nut makes access easier with the open-ended spanner in tight construction spaces. The spanner does not need to be changed so frequently, meaning the installation speed increases.

For the new bolt connections, Parker uses the EO metal-forming machine tool that is already on the market. With the machines used up until now to produce, for example, the EO-2-shaped pipe couplings, users can also create EO-3 couplings – an important contribution to cost reduction. This merely requires the corresponding EO-3 forming dies.

Flexible employment

In addition to rigid pipework, many applications demand flexible hose connections. EO-3 is applicable in both variants. Linking to existing EO-2 connections is also possible without any problems thanks to an adapter. This means 'old' couplings can be converted or upgraded to the EO-3 system at virtually no additional cost.

The new coupling system offers four times as much safety and does away with the standard LL, L and S series classifications that have, until of late, been customary. Other than a few exceptions, a single pressure stage of 420 bar applies to all pipe sizes. Elastomeric materials can be selected specifically for applications and, therefore, media.

Benefits of the new concept at a glance:

- Immediately detectable thread intake;
- Quick manual pre-installation;
- Safer installation due to reduced effort;
- Reduced space and time requirements for installation in difficult installation situations;
- Signal ring as a control option for the installer;
- Soft seal integrated in the cone improves sealing behaviour – even with high system dynamics;
- Additional increased safety provided by elastomers pre-installed in the fitting body;
- Compact design means space-saving constructions.

Parker's EO-3 coupling system can be used in rigid pipe connections and hose applications, for external pipe diameters from 6-42mm. **iVT**

Thomas Witt is product manager DIN Steel at Parker Tube Fittings Division Europe, DE-Bielefeld

CONTACT
www.parker.com/tfde
parker.germany@parker.com

PIERLUIGI PELANDA & FABIO MERIGGI

Best of three

THREE FACTORS ARE REQUIRED FOR COMPLETELY LEAK-FREE CONNECTION OF HOSES: RELIABILITY, SUSTAINABILITY AND PERFORMANCE. WHAT ARE THE CHANCES OF FINDING HOSES THAT OFFER ALL THAT?

To meet hydraulic application demands for reliability and performance, vehicle engineers typically look at medium-pressure braided hoses with a compact design and no-skive fittings. They also usually tend towards well-known and established names on the market, where real-world long life and dependability have been proved.

Hoses and fittings need to be tested against the requirements of the major internationally accepted standards such as EN, SAE and ISO. Approvals by external bodies such as Det Norske Veritas, Lloyd's Register, Germanischer Lloyd, the American Bureau of Shipping, Bureau Veritas and Registro Italiano Navale add more value and confidence for engineers working on key, often high-profile, projects.

Designing in reliability and sustainability

One of the most important factors that an engineer looks for is reliability. In the case of a hydraulic hose line, that primarily relates to the integrity of its connection. Hoses that use no-skive technology are therefore the preferred choice.



Skiving is the paring or shaving of part of the hose cover and/or inner prior to attaching the hose ends. No-skive hoses promote reliability and longevity as the hose core is not exposed to potential damage when the end fittings are crimped in place. Effective no-skive technology not only speeds up hose assembly time, as well as alleviating the need for additional clean-up steps, but will also improve levels of repeatability from hose to hose.

Meticulous design, testing and manufacturing processes for hoses and fittings will help ensure excellent mechanical connections between the hose and the fitting. A completely leak-free connection can deliver a long service life even with continuous use at very high pressures. Using a single source for the hose preparation and assembly provides cost and time savings to the assembler and helps ensure the end-user receives a defect-free, reliable and durable final product. This approach is undoubtedly the best way to meet the requirements of SAE J1273 and ISO 17165-2, which pay particular attention to matching the hose with the fittings.



ABOVE: **Get peace of mind by selecting a trusted source where performance is required**

In addition to reliability, another important aspect of hydraulic hose design is sustainability. This means meeting current application needs while preserving natural resources, minimising the impact on society and enabling future generations to meet their needs.

The introduction of chlorine-free hose ranges follows the philosophy of working towards the lowest possible environmental impact and reducing the risk and impact the products present to the environment at end of life. New compounds are also being developed by hose manufacturers to meet the strict requirements of the European REACH and RoHS regulations.

Of course, the use of hose materials with maximum sustainability and a minimised environmental impact at end of life need to be complemented by hose fittings with similar credentials. Companies such as Parker Hannifin offer a full range of fittings that are lead- and Cr6- (chromium in the +6 oxidation state) free, while still delivering a high degree of corrosion resistance in line with market expectations.

Where performance is required

Particularly challenging are applications that require higher performance from the hoses they use in terms of flexibility, a tight bending radius and resistance to abrasion and very low temperatures. Hoses that answer such needs while delivering the highest performance are the obvious choice for engineers working on behalf of OEMs, giving them the ability to design more aggressive angles for the moving parts on their machines. The Elite low-temperature range from Parker, for example, can be used in applications with ambient temperatures as low as -50°C. For extreme abrasion resistance, super-tough-cover hoses offer one million cycles according to ISO 6945 (450 times the standard cover).

Identification systems such as the Parker Tracking System (PTS) are designed to help customers reduce vehicle and asset downtime through increases in the speed, timing and accuracy of necessary repairs. Using a web-based application, PTS generates a unique identification code for each hose assembly, which is printed on a durable barcode or RFID label. These identifiers are specifically engineered to withstand harsh chemicals, extreme temperatures, UV exposure and other conditions that are typical of many off-highway applications. **iVT**

Pierluigi Pelanda is new products development manager; Fabio Meriggi is market development manager at Parker

CONTACT
www.parker.com
infohpdemarketing@parker.com

DAVID S CLERC

Breaking news

HEAVY-DUTY HYDRAULIC QUICK CONNECTORS ARE THE IDEAL SOLUTION FOR DEMOLITION EXCAVATORS, ENSURING MINIMUM SPILLAGE AND EFFICIENT OPERATION WITHOUT RISK OF DAMAGE TO EQUIPMENT

When a demolition job needs to be carried out, it must be done quickly and efficiently, with reliable equipment. That's why Stucchi employs its half a century of experience in hydraulic quick connection to provide efficient and easy solutions to the toughest applications, to make sure that the work will be accomplished in time, breaking everything but the equipment being used.

Demolition excavators are probably among the toughest applications that exist for hydraulic circuits and their connections. Demolition hammers need to be operated with high impulse pressure, testing the resistance of the different components to their limits. So with these specifications in mind, Stucchi has developed a series of products purely for heavy-duty applications, drawing on its 50 years of experience and high quality standards to provide the most reliable quick connectors. Because of this, operators are able to change booms and tools quickly without worrying about the resistance and the lifetime of their quick connections and equipment.

Having been specially designed for the most heavy-duty applications, the VEP HD series is the first of Stucchi's suitable solutions for this market. High among its innovative features and benefits are the minimum spillage and air inclusion with flat-face technology, a quick and easy way to dis/connect, as well as optimised pressure-drop performances. It is even possible to connect the VEP HD under pressure due to its innovative triple-valve patented technology.

Last but not least, the VEP HD Series has been tested and validated up to one million pressure cycles at maximum working pressure, with components dimensioned to resist and provide the same level of efficiency for a long time. Sizes from ⅝in to 1½in are available in a wide range of ports and configurations, including SAE, NPT and flange port (code 62).

Making a connection

Multicouplings are another useful solution, especially if there is a requirement to connect and disconnect several hydraulic lines at the same time. Stucchi's technology offers the ability to mount several different sizes of couplings in one plate and to connect them effortlessly via the ingenious lever/cam system.

This innovative product has been a great success as a result of its beneficial key features. For example, it provides easy and quick connection/disconnection of multiple hydraulic lines (up to 10 of them) in just one movement, even when there is residual pressure in the circuit. It also prevents cross-matching the lines, which is safer for the equipment and avoids breaking components by mistake.

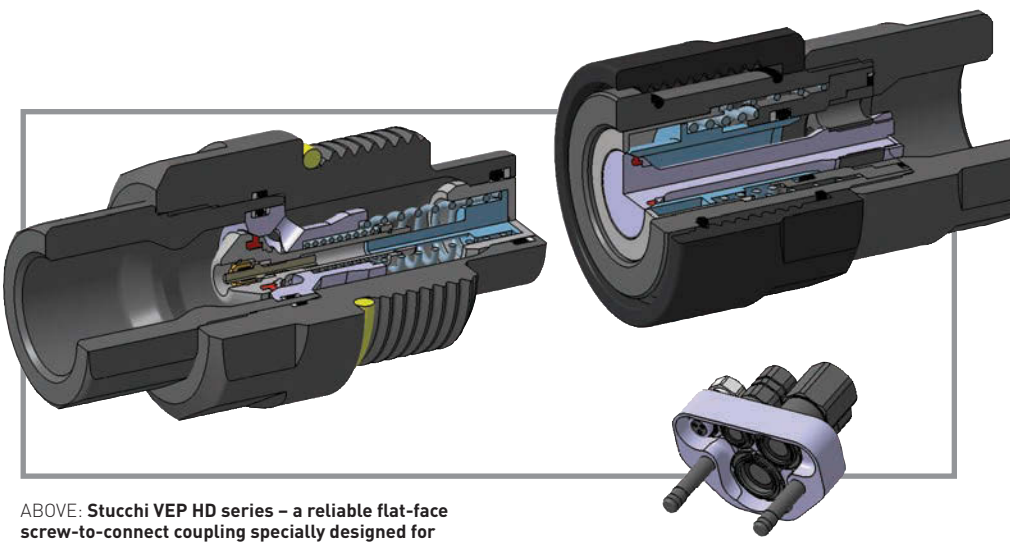

ABOVE: **Stucchi VEP HD series – a reliable flat-face screw-to-connect coupling specially designed for heavy-duty applications**

All of these benefits combine minimum spillage, improved pressure drop and extended lifetime of the company's flat-face couplings. There is no doubt that designers will be able to find the product they need among the wide range of configuration and ports that Stucchi keeps in stock. It is even possible to add up to two electrical connectors with the hydraulic lines.

Of course, every machine is different and there is not necessarily a standard solution. Stucchi studies each application separately to ensure it delivers the product that will best fit its particular needs. For a demolition excavator, size and performance will differ from one machine to another, as well as the number and sizes of its hydraulic lines.



ABOVE: **Example of a plate with several lines assembled on a boom attachment**

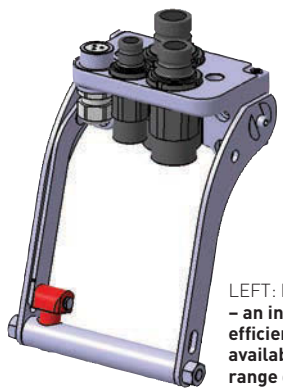

LEFT: **Multicouplings – an innovative and efficient solution available in a wide range of configurations**

The smaller boom attachments will find a perfect solution with the VEP HD couplings, while the bigger tools will need to easily connect several lines with a plate. In one way or another, the company's specialists will make sure that the solution provided delivers satisfaction, providing a quick and reliable hydraulic connection even after hours of intensive use. **iVT**

David S Clerc is a product specialist at Stucchi

CONTACT
www.stucchi.it
vendite@stucchicom.com

THE BATTERY SHOW | DETROIT

The Expo for Advanced Batteries

September 17, 18, 19 - 2013
Detroit | Michigan | USA

LIMITED EXHIBITION OPPORTUNITIES! BOOK NOW TO SECURE A BOOTH!

AMERICA'S LARGEST TRADE SHOW FOR THE ADVANCED BATTERY INDUSTRY

FREE-TO-ATTEND EXHIBITION

Only at The Battery Show can you access:

- ✓ Two trade shows in one
- ✓ 300+ vendor supply chain exhibition
- ✓ Multi-track conference program
- ✓ Complimentary networking receptions

CONTACT US

Email: **info@thebatteryshow.com**
Web: **www.thebatteryshow.com**

Co-located with
electric & hybrid vehicle technology expo

Register now at www.thebatteryshow.com

DICK WILLIAMS

Out with the old...

... AND IN WITH THE NEW. A SIMPLE CHANGE OF HYDRAULIC FLUID CAN LEAD TO VASTLY IMPROVED PERFORMANCE AND ECONOMY FROM CONSTRUCTION VEHICLES

Manufacturers of construction equipment use all manner of high-tech tricks, including fully automated fleet management and satellite-directed 3D control, to make their machines even more efficient and cost-effective. But another, far simpler, way of achieving these aims is often overlooked, although its success rate could be as high as 80%: a change of hydraulic fluid! That should, however, preferably be formulated according to the Dynavis performance standard. This may initially cost a few euros more, but the extra expenditure rapidly and reliably pays off in terms of improved efficiency and reduced fuel consumption. It's a simple concept. But does it work in practice? And, if so, how?

Dynavis is not oil. It is an additive technology for hydraulic fluids that boosts their performance. As it optimises the fluid's properties over a wider range of application temperatures, these fluids are referred to as multigrade as opposed to conventional monograde fluids. The company behind the Dynavis brand is Evonik Industries, a German global player in specialty chemicals and therefore a guarantor of high and consistent product quality.

Conventional monograde fluids still make up the lion's share of hydraulic fluids used in construction equipment. But those wishing to switch to a true high-performance fluid in their construction machinery are now being shown the way forward by the blue and yellow seal on the product of their choice. The Dynavis brand name and the performance standard that is associated with it were first unveiled to the construction industry at Intermat in Paris in 2012.



ABOVE: **The operator does not even need to work out when Dynavis will start to pay off, as a calculator at www.Dynavis.com will provide the answer in seconds**

What happens when things get hot

Most of the movements of construction equipment are hydraulic in nature, so much of the fuel is therefore used for operating the hydraulic pump. This pump, however, is subject to what is known as internal leakage: the longer and more intensively the equipment is used, the hotter the fluid becomes and the higher the loss of efficiency. For example, hydraulic excavators pushed to the limits of their capacity in shifts lasting several hours especially benefit from hydraulic fluids formulated with Dynavis.

But Dynavis technology goes beyond reducing internal efficiency loss: it also breaks the vicious cycle in which hot hydraulic fluid is continuously heated further. Thanks to Dynavis, pump output remains stable even after several hours of operation under full-load conditions. The equipment's increased agility and performance results in more completed load cycles – and fuel savings of 5% or higher.

In the very first field test of high-performance hydraulic fluid formulated with Dynavis, operators noticed a big difference compared with conventional hydraulic fluid. Extensive and numerous field tests followed, which confirmed these initial findings over and over again. Experienced operators are excited about Dynavis. "I was amazed at how much faster I can work with this hydraulic fluid. With a standard fluid I could move 96 shovels in about 20 minutes; with Dynavis I could do 130 in the same time," says Friedel Brandt, an excavator operator for the past 30 years and winner of the Cat Operator Competition.

A calculator at www.Dynavis.com provides details of potential fuel savings in seconds. Using very little data, the Dynavis calculator can also work out the increase in efficiency, and the reduction in CO_2 emissions. The calculation is based on actual results from extensive field tests, to ensure the values returned by the calculator are reliable.

And now Total, one of the world's largest oil producers, is launching a hydraulic fluid formulated with Dynavis technology – Total Equivis HE.

At Bauma this April, the Dynavis team came up with a unique demonstration of Dynavis capabilities that was kept secret all the way up until its dramatic presentation at the Sany Group stand. "We wanted trade-show visitors to be able to see for themselves the huge difference in performance between fluids with and without Dynavis formulation," says Rolf Fianke, aftermarket support manager for Dynavis.

With a pair of bicycles in side-by-side configuration, each connected to its own hydraulic pump and its own columnar reservoir of fluid, 'pedalling' visitors to the stand could literally feel the Dynavis difference in their legs, and see it as they advanced the fluid upward in their reservoir. **iVT**

Dick Williams is global communications manager for Evonik Fluid Additives

CONTACT
www.Dynavis.com
Dynavis@evonik.com

BULLETIN BOARD

'COMPACT' CALLIPER MAKES A BIG IMPRESSION



The HSF 4x70 hydraulic fixed caliper was initially developed by Knott for armoured wheeled vehicles, meaning that high quality is guaranteed. This is a market where huge demands are made regarding functionality and reliability.

"The challenge for us was to install within the standardised 20in wheel rim," says Richard Hamberger, Knott application manager. "Until now, standard 4x60 calipers were used, but when a GVW of 27 tonnes is exceeded, their reliability can't be guaranteed."

When vehicles are technically upgraded, a totally different total mass results – mainly as a result of additional armour for mine protection. This demand is countered brilliantly with the HFS 4x70: it allows the same rim and brake disc size to be used in 8x8 vehicles up to 34 tonnes.

Outside of the military arena, the advantages become evident. "Because it is ideal for the off-road environment, a market we also support, the HFS 4x70 will attract interest for mining and earthmoving vehicles as well," says Hamberger. The mass and size optimisation of the brake is just one aspect. The main virtue is its 'wading capability', which makes a big difference. "The dirty water sealing option means amphibious vehicles can be fitted with the system. For mining, this is a big advantage, especially where watercourses have to be negotiated or adverse weather conditions may be encountered."

In essence, Knott has come up with something big – but within a compact package. In times of seeking optimum efficiency, this must be the right answer.

ENQUIRY No. 501

Knott
www.knott.de
info@knott.de
+49 8056 9060

EFFICIENT DRIVETRAIN OFFERS COST BENEFITS



The Spicer TE30 powershift transmission is an optimised drivetrain system for reach stackers and heavy-duty forklift trucks that delivers greater fuel economy and lower cost of ownership.

Compatible with engines ranging from 225-300bkW (300-400bhp) – including Tier 4 models – the Spicer TE30 has the same installation envelope as short-drop versions of the Spicer TE27 and Spicer TE32 transmissions, meaning it can fit into existing materials handling vehicle designs.

Available from the first quarter of 2014, the Spicer TE30 transmission features numerous engineering refinements to improve efficiency, including decreased spinning speeds of internal components to lower oil churning losses; optimised clutch sizes with intelligent lubrication management; a torque converter with a lock-up clutch to eliminate converter losses in high-power conditions; and reduced gear ratio steps that enable shifting in direct-drive mode.

Dana's proven powershift transmission platform enables efficient, continuous lock-up shifting, while an integral torsional dampener reduces engine vibration. The Spicer TE30 transmission offers five forward and three reverse speeds, and meets growing market demand for heavy-duty materials handling equipment.

ENQUIRY No. 502

Dana Off-Highway Products
www.dana.com/offhighway
info@dana.com
+1 704 878 5886

FRONT-AXLE DESIGN IMPROVES DRIVER CONTROL



Articulated dump trucks are configured for off-highway and rough-terrain conditions where all the wheels need to be in contact with the ground for maximum tractive effort. To give the driver the best comfort while driving in these conditions, NAF produces a front axle for a 30-tonne ADT with fully independent suspension. Double wishbone design and four-spring struts with hydraulic dampers provide excellent off-road capabilities.

The major advantages include low body vibration, short cycle times, class-leading ride and comfort, leading performance, and the ability to go where others can't follow. Productive, robust and safe, it has been tested under extreme conditions to ensure proven power, productivity and reliability.

To reach extended service intervals, the axles are equipped with oil-cooled disc brakes on the wheel: the patented NAF Turbo Brake does not require any external cooling and features a fully sealed design for long service life in all conditions.

To offer the complete configuration, including the pipes for the central greasing system, is just one part of NAF's role as a system supplier for sophisticated drive solutions. Using a modular system, the company is able to use existing components and combine them in a new way, or with small modifications, to provide the best and durable parts for reliable driveline solutions.

NAF is also launching a new family of transfer cases as an alternative to the existing transfer solutions of regular two-motor cases or powershift versions. With different applications and vehicle weights in mind, the company offers two new solutions: the DualSync, with two hydraulic motors, and the SingleSync.



DualSync is a hydrostatic two-motor transmission that combines both hydraulic and mechanical synchronisation in an innovative way and provides full CVT functionality. The whole speed range can be driven through without stopping and without any gap in tractive effort.

With its compact, robust design and a wide range of available ratios, NAF's DualSync is an excellent choice for hydrostatically driven vehicles in rough terrain such as forestry machines, heavy wheeled loaders and telescopic handlers.

ENQUIRY No. 503

NAF
www.nafaxles.com
info@nafaxles.com
+49 9134 7020

COMPACT EXTENSION SENSOR IS MADE TO MEASURE FOR TOUGH APPLICATIONS



ASM Sensors has launched the WB61 tape extension sensor, which provides up to 4,000mm measuring length in a compact housing. All ASM tape extension sensors have been designed to operate in harsh conditions, which makes them a perfect choice for the mobile working machine market as well as other harsh, demanding applications.

Due to the design of the sensor and the inherent strength of the stainless steel tape, they can be found in environments and areas where other sensors struggle to survive, such as hard-to-reach areas where directional changing pulleys are used, or where temperature extremes can cause problems such as icing. The life of the ASM range of tape extension sensors is totally unaffected by the use of pulleys, which makes them the perfect choice for the safety-critical areas often found in crane operation or the mobile working market in general.

The new WB61 model is made from a high-quality moulded housing, which enables lower construction costs for a rugged sensor that meets a high sealing level of IP67/69K (operational), making it an affordable choice for today's demanding markets. The WB61 is also available with a choice of three analogue and three digital outputs (SSI, CANopen or CAN J1939) and a linearity of +/- 0.10%, with the additional option of redundant outputs. The WB61 is perfectly suited for installation on cranes, excavators, forklift trucks, hoists and access platforms. A data sheet can be downloaded from: http://www.asm-sensor.com/asm/pdf/pro/wb61_en.pdf

ENQUIRY No. 504

ASM Sensors
www.asmsensors.com
info@asmsensors.com
+1 630 832 3202

ABT ROLLS OUT A WHOLE NEW PACKAGE

ABT Products has fast become the first choice for many of the world's leading vehicle and equipment OEMs. This has been achieved by constantly looking at ways to offer new services and competitive advantages for its customers.

"We need to be more than just a subcontract supplier," explains Mark Hignett, MD of ABT. "Our customers demand a complete product and service package that is beyond the traditional supply chain model. They require a full manufacturing partner."

With over 40 years' engineering and manufacturing expertise in operator's cabins, roll bars and safety structures, the offering of internal ROPS/FOPS testing capabilities was a natural progression. "More and more customers are demanding ROPS and FOPS safety structures as standard," explains Tim Morris, engineering director. "Combining our in-house testing facilities with advanced FEA packages has allowed us to utilise high-tensile materials, significantly reducing weight and cost from the cabs and roll bars we produce."

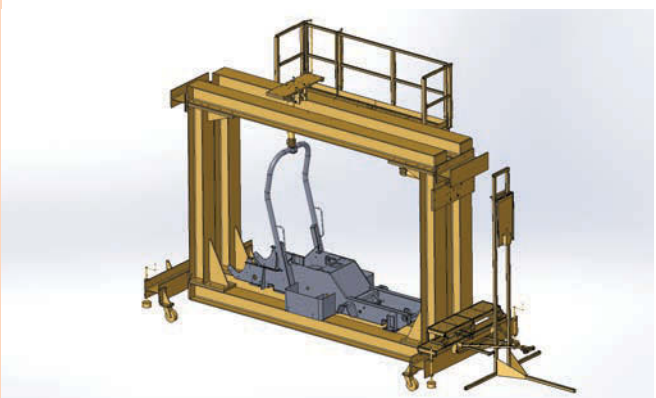

ABT recognises the cost and management time that goes into producing a complex product: from the initial design and prototypes stage, right through to full-batch production. It has now specifically tailored the business to manage the total supply chain for its customers and now produces complete finished products rather than sub-assemblies, fitted with engines, axles, wiring, suspension components, chassis and ROPS/FOPS cabins. These are all designed, tested and manufactured under one roof, and shipped directly to the end user on the customer's behalf.

ENQUIRY No. 505

ABT Products
www.abtproducts.com
mark@abtproducts.com
+44 1989 563656

ILLUMINATING DISCOVERY

Nordic Lights introduced its latest round LED work light, the Nordic Virgo LED N3101, at Bauma. The work light offers superior illumination with an evenly distributed light pattern. With a theoretical output of 5,900 lm, an operational lumen output of 3,700 lm, and a mere 50W power consumption, it gives a high lumen/watt efficacy. The work lamp is offered in four light patterns: high beam, low beam, wide flood and flood; and at 126x 126x86mm and 1.3kg, it provides impressive light from a reasonably small package.

Features include the optically even distribution of light pattern; a long lifetime, with minimum maintenance requirements, due to its heavy-duty construction, multivoltage, replaceable lens, waterproof, extensive EMC; and protection against load dumps, over voltage, reverse voltage and overheating. The light's IP rating covers IP68, IP6K9K and SAE J1455, and it withstands salt mist according to ISO 9227 for over 240 hours.

The Nordic Virgo LED N3101 fulfils the EMC standards of ISO 13766, ISO 14982, ISO 7637-2 and CISPR 25 Class 3. It is possible to order the new work lamp in five different lenses: transparent, white, yellow, amber or red.

Nordic Lights is a Finland-based company that designs, develops and manufactures LED, HID (Xenon) and halogen work lights for harsh working environments in the heavy-duty on- and off-highway industries. The use of Nordic Lights' products ensures that darkness, vibration, shock, humidity and dust will not affect visibility when the results of your work and safety depend on effective lighting.



ENQUIRY No. 506

Nordic Lights
www.nordiclights.com
nordiclights@nordiclights.com
+358 6781 5100

DIRECT-ACTING VALVE OPTIMISED FOR TRANSMISSIONS

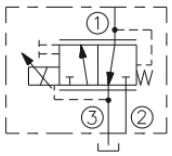

HydraForce has developed a new model of direct-acting proportional control valve designed to provide higher flow, lower pressure drop, reduced leakage and faster response for transmission applications. The improved flow rating enables the EHPR-T38 to provide more flow into a clutch for shifting – which is an important advantage for transmission control as it eliminates the need for a main stage spool.

This direct-acting solution is simpler than pilot-operated valves, with fewer moving parts, and reduced hydraulic leakage. Response time has improved to 25ms, which is about half the response time of a comparable pilot-operated transmission control valve.

In addition, the EHPR-T38 valve was optimised with the use of Computational Fluid Dynamics (CFD) to increase its flow rating to 30 l/min (8 gal/min) with a pressure control range of 23 bar (330psi). Pressure drop has been reduced from 17.2 bar (249psi) to 7.2 bar (104psi) in the reducing flow direction and from 13.4 bar (194psi) to 5.9 bar (85.5psi) in the relieving direction.

The EHPR-T38 complements a full line of contamination-resistant transmission valves that feature IP69K rated coils, and are capable of withstanding 1,000 hours of salt spray.

With over 15 years of transmission experience, HydraForce has provided numerous customised transmission solutions and is highly capable of functioning as a full partner in the development of new and improved transmission solutions.

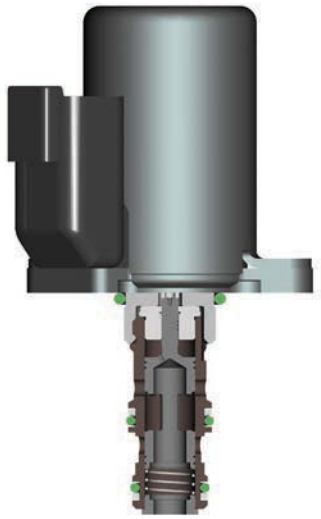

ENQUIRY No. 507

HydraForce
www.hydraforce.com
HFMarketing@hydraforce.com
+1 847 793 2300

KEEPING TABS ON HIGH-QUALITY COMPACTION



The quality and, therefore, longevity of an asphalt road can be improved considerably through homogeneous and high-quality compaction. The MCA-2000 roller system from Moba Mobile Automation has been designed to facilitate controlled compaction during asphalt paving, and in this way contributes to improving the quality of the road.

The MCA-2000 measures the asphalt temperature with infrared temperature sensors and uses GNSS positioning of the roller to ascertain the number of passes. As a result of the combination and real-time visualisation of this information on the 7in display, the driver can immediately identify where sufficient compaction has already been performed and where additional passes are still necessary. This way, the system prevents over-compaction and cracked gravel, but also low- or uncompacted areas.

By means of the temperature display, the Moba system allows compaction to be performed in the optimum temperature spectrum. This prevents the compaction of asphalt that is too cold, which can damage the material and result in road damage. The system increases the efficiency of the roller as less time is required and unnecessary passes are prevented.

The cost-effective MCA-2000 is not only easy to operate and install, but improves the quality in the compaction process. It can also be used in earthmoving applications. With the wireless data transfer facility, data can be quickly and conveniently exchanged between machine and office, eliminating the need to travel from the office to the construction site.

The data – compiled into a report, as quality verification, for documentation and for tracking project progress – can be made immediately available.

ENQUIRY No. 508

Moba
www.moba-platform.com
info@moba-platform.com
+49 6431 9577 123

DESIGN YOUR OWN CAB

Optimised design is a must for the cabins of construction vehicles and agricultural machinery; for many people, these cabins are their everyday place of work.

Continental takes this fact into account, developing, among other products, consoles and cockpit solutions for this vehicle group. Now, the company is going one step further and using an online platform to involve users in the development process. In the first such effort, they are designing an innovative user concept for the armrest. This was showcased at the recent Bauma trade fair in Munich.

The cockpit is a highly complex area where issues of safety, comfort and wear have to be taken into account. That calls for ergonomic design and flexibility to minimise strain on drivers and to allow ergonomic manoeuvring, taking all external factors into consideration. All of this has to be kept in mind during the design process.

In its new online product development platform, the company is currently working on the display, gradually posing questions about each component right through to the central console with the corresponding operating element.

The platform members can then contribute their ideas and wishes via detailed questionnaires and 'user labs'; these are then implemented by the developers at Continental using an iterative process.

Customers, users and interested persons can register at www.continental-innovation.com to contribute their ideas and collaborate on the project.



ENQUIRY No. 509

Continental
www.continental-innovation.com
+49 511 938 01

QUICK-RELEASE COUPLINGS GUARANTEE NO SPILLAGE

In construction applications, it has now become necessary to develop innovative technological solutions for several problems in a variety of situations.

As a consequence, the technical solutions adopted for developing and manufacturing the new Faster FHV series quick-release coupling must meet the highest standards because quick-release couplings represent the interface between the machine (power source) and the hydraulic attachment.

Homologation tests have confirmed the best performance of FHV screw-on couplers:

- User-friendly, with Rd thread and safety sleeve;
- Female adaptor free in rotation;
- Excellent corrosion resistance;
- Polyurethane sealing technology;
- Maximum working pressure up to 46MPa; and minimum pressure drop;
- High burst resistance.

Faster's FHV screw-on couplings are characterised by the perfect flatness of the shut-off valves adopting the flat-face valve technology. This product concept guarantees no spillage or air inclusion during line dis/connection due to the flat-face valves. Cleaning is simplified due to the flatness of the mating surfaces, while the female valve is blocked within the coupling by using a pair of patented semi-guides made of sintered steel, which grants a greater flow cross-section.

Faster FHV screw-on couplings are available with a wide range of threaded adaptors such as BSP, metric, NPT, SAE, flange and flange head.



They can also be equipped with dust protection caps (on request) in two different choices: aluminium screw-on caps, and PVC rubber plug.

ENQUIRY No. 510

Faster
www.faster.it
faster@faster.it
+39 0363 377211

INDEX TO ADVERTISERS

ABT Products Ltd 61
ASM GmbH 87
Bauser GmbH & Co KG 76
Caterpillar Industrial Power Systems ... 27
ContiTech GmbH 3
Curtis Instruments Inc 4
Dana Off-Highway ..... Inside Front Cover
Electric & Hybrid Vehicle Technology Expo 2013 Inside Back Cover
Evonik Industries AG . Outside Back Cover
Faster SpA 30
Flexxaire Inc 58
FPT Industrial SpA 43
HydraForce, Inc 15
IFPE/CONEXPO-CON/AGG 2014 46
John Deere Power Systems 10
Knott GmbH 48
MOBA Mobile Automation AG 76
MOTOMETER GmbH 85
MTS Sensor Technologie GmbH & Co KG 13
MTU Tognum AG 8
NAF Neunkirchener Achsenfabrik AG... 50
Nimco Controls AB 58
Parker Hannifin BG GmbH Fluid Connectors Group 17
Parker Hannifin GmbH & Co KG 87
Sittab Stol AB 50
Stucchi SpA 69
The Battery Show 2013 80
Thermamax 34
Tyco Electronics AMP GmbH 48
VDO Automotive AG Continental 37
Webasto Thermo & Comfort SE 53

CAN Ignition Control - Electronic ignition lock

Effective protection against unauthorised access, machine theft and engine manipulation

- Customizing by manufacturer
- No project costs
- Short development period
- Communication via CAN-Bus
- Wireless data storage on starter key
- Read out on a PC



MOTOMETER
powered by solutions

MOTOMETER GmbH
Talweg 8 | 75417 Mühlacker-Lomersheim/DE | **Phone** +49 7041 9695-0 | **Fax** +49 7041 9695-55 | **E-Mail** info@motometer.de
www.motometer.de

TFT PROVIDES A VIEW TO THRILL

With its new product range of displays with colour TFT technology, Bauser provides operators with increased comfort in visualisation and operation. Modern display screens, such as 2.8in, 3.5in or 4.3in colour-transmissive TFT LCDs, in different resolutions, i.e. QVGA 240x320 or 320x240 pixels and WQVGA 480x272 pixels, incorporate 16-bit colour to provide 64K colours.

A white LED backlight achieves different brightness levels, starting at 350cd/m², and is upgradable to provide a clear view from different or wide viewing angles, irrespective of the viewing position.

A highly efficient graphics controller with a direct 16-bit parallel interface for data transfer benefits from a low-power ARM-core processor with a large Flash and RAM memory to enable fast and flicker-free image composing.

Not only will the quality of data and graphics indication be improved in design, colour and resolution, but the interactive communication between human and vehicle is also enhanced.

Graphic tools will shortly be available that allow OEMs to tailor Bauser's user interface to their own requirements for increased flexibility. For instance, via the integrated CANbus interface, the displays can be used to advise the user of Tier 4 emission control features. The next steps will be to design a platform that offers the user a command structure similar to that on a smartphone, and implement a video-input for a camera connection.



These displays can be applied in the traditional automotive operating ambient temperatures of -40° to +85°C and can resist high shock and vibrations. The IP67 front protection of the casing provides a firm resistance to high-pressure cleaning or salt spray, and the rear casing can be resistant up to IP65 by using a special sealed connector and Gore-Tex Membrane.

ENQUIRY No. 511

Bauser
www.bauser-control.de
mail@bauser-control.de
+49 7485 18111

BUILT FOR COMFORT

Sittab has released a new line of seat accessories, powered by electric motors, and including a memory function. To enable settings to be saved, greatly simplifying personal use, a mobile app called SittApp has been created.



Via Bluetooth, the saved seat adjustment is transferred to the seat as the operator enters the vehicle, providing the preferred individual comfort settings.

During Bauma, floor-mounted equipment such as off-highway electrical siderails and powered rotation were displayed, in addition to the SittApp. Later this year, the seat-mounted equipment for electrical armrest positioning will be released – also included in the SittApp function. The 'Sittab Inside' symbol on the cab door will indicate the possibility to use the SittApp.

A demonstration of the technology can be seen at www.ivtinternational.com

ENQUIRY No. 512

Sittab
www.sittab.se
info@sittab.se
+46 24324 4250

MTU POWER SENT TO THE PILBARA

China-based Xiangtan Electric Manufacturing Corporation (XEMC) recently shipped its first-ever export of mine dump trucks to The Pilbara mine site in Australia. Each of the 230-tonne trucks, purchased by Rio Tinto and now put into service, are powered by the MTU 16V 4000 C11 mining engine provided to XEMC by MTU Hong Kong, a Tognum Group subsidiary. This world-class propulsion package was specifically requested by Rio Tinto for its iron ore mining operations at Pilbara because of its best-in-class fuel efficiency and unsurpassed reliability.

The MTU 16V 4000 C11 mining engine produces 2,300bhp (1,715bkW), and comes with many features that enable it to operate reliably and efficiently in the harshest of mining conditions. Those features include common-rail fuel injection, double-walled fuel lines, carbon scraper pistons and oil system security filters. In addition, the engine's class-leading fuel economy is enhanced by an efficient oil cooling system, which optimises the oil temperature.



"Because our reliability and fuel economy standards are very high, we insisted on the MTU Series 4000 engine for each truck," said Neil Coney, general manager for fleet strategy and delivery, Rio Tinto. "It was amazing to see XEMC produce four trucks that can meet our strict requirements within one year."

The MTU engines in Rio Tinto's new XEMC mine trucks at Pilbara will be supported by MTU Detroit Diesel Australia, the exclusive distributor and service provider of MTU engines in Australia.

ENQUIRY No. 513

MTU
www.mtu-online.com
industrial1@mtu-online.com
+49 7541 90 77777



Together, we can build the ground for reliability, sustainability and performance.



Breakdowns can be frustrating and costly in the construction industry. At Parker, we help you with unrivalled products and services to reduce your downtime to a minimum.
The new wire braided Elite No-Skive hose range with outstanding technical properties such as superior flexibility, tighter bend radii and tough or super tough hose cover exceeds the EN specifications.
The range also includes a new chlorine-free hose type with a smooth pure nitrile inner tube – a hose which is environmentally friendly from production to disposal and that with an excellent chemical resistance.
And should a hose assembly in your equipment ever fail, the Parker Tracking System Enterprise increases the speed, timing and accuracy of your next hydraulic hose replacement and delivers outstanding service when you need it most.
Save valuable time with www.parker.com/pts

Parker

ENGINEERING YOUR SUCCESS.

00800 2727 5374 | www.parker.com

ASM®

perfect in sensors.

Robust Sensors for Mobile Working Machines

POSITAPE®
Tape Extension Position Sensors

- Measurement range 0 ... 236.2 in.
- Analog, 4...20mA, SSI, CANopen, J1939
- Protection class IP64 / IP67



POSICHRON®
Magnetostrictive Position Sensors

- Measurement range 0 ... 216.5 in.
- Analog, 4...20mA, SSI, CANopen, J1939
- Protection class IP67 / IP69K



POSICHRON®
Magnetostrictive Position Sensors

- Measurement range 0 ... 216.5 in.
- Analog, 4...20mA, SSI, CANopen, J1939
- Protection class IP67 / IP69K



POSIROT®
Magnetic Angle Sensors

- 360° angle sensor
- Analog, incremental, SSI, CANopen, J1939
- With 0.39 in. shaft
- Protection class IP67 / IP69K



POSITILT®
Inclinometers

- 1/2 axes, ±180°, ± 60°
- In MEMS technology
- Analog output, CANopen, J1939
- Protection class IP67 / IP69K



POSITILT®
Inclinometers

- 1/2 axes, ±180°, ± 60°
- Analog output, CANopen, J1939
- Protection class IP67



www.asm-sensor.de
info@asm-sensor.de
Tel. +49-(0)8123-986-0



WHEN DIRECT LABOUR ACCOUNTS FOR ONLY 15% OF THE COST OF ASSEMBLY, WHERE DO THE SAVINGS GENERATED IN LOW-COST COUNTRIES REALLY COME FROM?

You can choose your friends but you can't choose your neighbours – or, indeed, customers. For although I had dealt with Warren for several years, he had the sort of bumptious demeanour that left me wanting to strangle him after an hour or so.

"Thing is," he was saying, "I don't really care where the axles come from as long as they're cheap." Then, as an aside – "I assume the quality will be fine?" The last remark was a sort of question but put in such a way as to appear that you'd helped him reach the conclusion, which, of course, I hadn't.

"THING IS, I DON'T REALLY CARE WHERE THE AXLES COME FROM AS LONG AS THEY'RE CHEAP"

To be fair, Warren's axles had been sourced from India not at his bidding but simply because the company he purchased from had decided to move the models he used to a factory in a developing nation to reduce cost or increase shareholder value (that's 'increase profit' for the layman). I don't think it had actually made much difference to the price he paid, but he was trumpeting the move as the business coup of the decade.

"If they can produce them more cheaply in India than in Europe, that's fine by me. Let the devil take the hindmost." Clearly, Warren is an idiot. But even so, how healthy is this attitude in the light of what we now know about emerging economies?

The majority of us realise that commodities have a world price, as does shipping, so the main variables must be labour costs and overhead. In most modern assembly operations the direct labour accounts for only a maximum 15% of the cost, so where does the rest of the saving come from, and – perhaps more to the point – does anybody care?

The recent tragedy in Bangladesh brings this sort of question into very sharp focus. Seven thousand textile workers were packed into a 'factory' that collapsed, ostensibly because the building, which had originally been designed as a residence, was catastrophically overloaded.

The world's media made much mention of Reshma Begum, the survivor who was pulled from the rubble of the collapsed factory 17 days after being buried. Good for her – but little consolation to the families of over 1,100 of her colleagues who lost their lives, to say nothing of those who sustained serious injury.



Illustration: Julie Welby

Sadly, these things happen in developing countries, but that does not mean we have to augment them – and augment them we do. In fact, one floor of the affected building was involved in the supply chain of Primark, one of the top UK high street clothing suppliers, which prides itself on budget pricing.

But back to Warren. I'm not saying or even suggesting that his supplier runs a sweat shop – in fact, as I have reported in this column in recent years, I have been in factories in India where the conditions are exceptionally good and rival those in the West. But – and this is a big but – I have also been in Indian factories where obsolete machinery leaks oil onto a dirt floor, workers are in bare feet or wear oil-saturated sandals, guarding is absent and arc welders try to protect their eyes using the glass from discarded beer bottles.

These sorts of companies do tend to be lower in the supply chain, but their subcomponents still end up contributing to the perceived 'lower cost' product that most western purchase offices are salivating for. As I say, the money we 'save' must be coming from somewhere and I would venture to suggest that the low pay, poor working conditions and general lack of concern for worker safety and environmental impact in developing nations certainly contribute.

I recognise that Rome was not built in a day and possibly these things will improve. But as the perceived success of these emerging economies is constantly rammed down our throats, when are they going to conform to the same rules as companies in the developed world? In the USA, the UK and, hopefully, the rest of Europe, the sort of flagrant disregard for workplace safety that leads to serious industrial accidents is avoided by work safety standards and the rights of workers to earn a living wage. This does not happen in the 'low-cost economies' – which is a contributing factor to their 'low cost'.

Warren may believe he is getting a bargain from India with his axles, and the shiny new Chinese backhoe at a drop-dead price may look great, but until these countries level the playing field on health, safety and employment standards, these savings come at too high a price. How you factor health risk, starvation wages and appalling work conditions into your buying equation is hard to imagine – but for some it is clearly second nature. **iVT**

Comments: theinsider@ukipme.com

SEPTEMBER 17-19, 2013
NOVI, MICHIGAN, USA

electric & hybrid
vehicle technology expo
passenger • commercial • off-highway

LIMITED EXHIBITION OPPORTUNITIES! BOOK NOW TO SECURE A BOOTH!

AMERICA'S LARGEST TRADE SHOW FOR ELECTRIC AND HYBRID VEHICLE DEVELOPMENT

Supported by
electric & hybrid
vehicle technology international

FREE-TO-ATTEND EXHIBITION

Only at Electric & Hybrid Vehicle Technology Expo can you access:

- ✓ Two trade shows in one
- ✓ 300+ vendor supply chain exhibition
- ✓ Multi-track conference program
- ✓ Complimentary networking receptions'

CONTACT US

Email: info@evtechexpo.com
Web: www.evtechexpo.com

Co-located with
THE BATTERY SHOW

Register now at www.evtechexpo.com

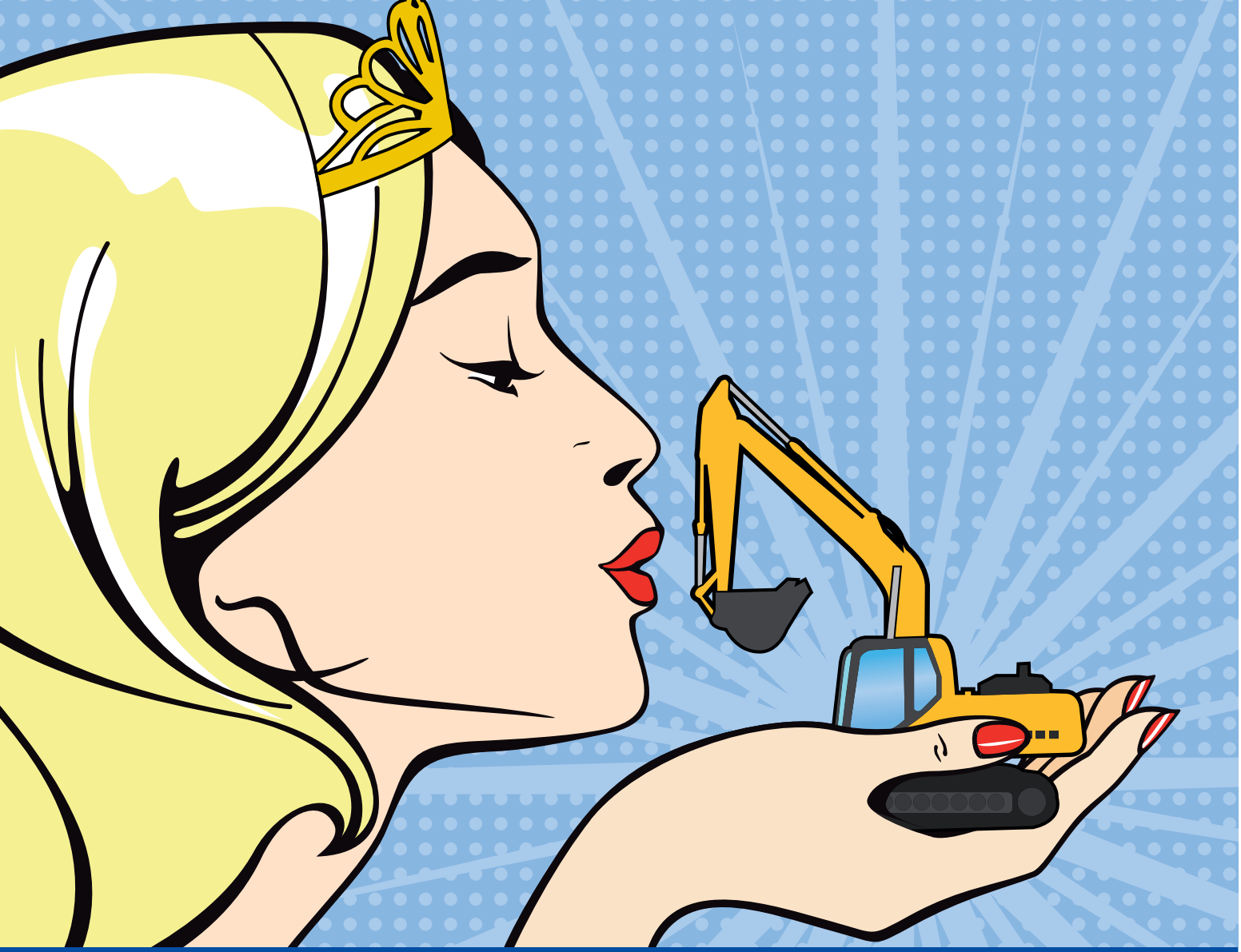

Multiply Your Efficiency!

Your Construction Equipment – Tap Into Its Princely Potential!

High-performance, high-quality hydraulic fluid formulated with DYNAVIS® technology helps lift equipment performance to new heights. A DYNAVIS® label on your hydraulic fluid container is the symbol of premium quality in high-efficiency lubricant formulation.

DYNAVIS®-formulated fluids can provide:

- Reduced fuel consumption
- Improved productivity
- Increased hydraulic power

DYNAVIS® – More Power, Less Fuel

DYNAVIS® is a brand of Evonik Oil Additives GmbH

DynaVIS
More Power • Less Fuel

www.dynavis.com